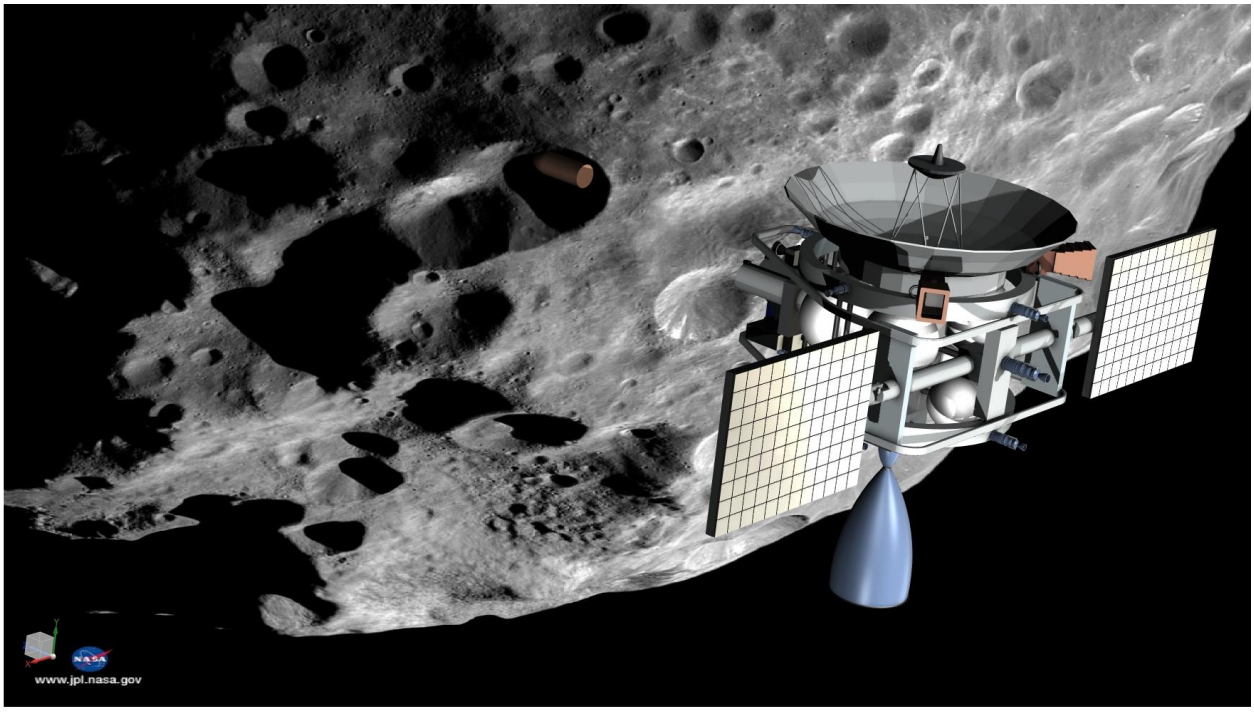


# Triple Reconnaissance Impactors for Development and Evaluation of Near-Earth asteroid d Technologies

## Mission Proposal
## For Low-Cost Asteroid Precursor Mission

Sabeeh Butt
Samuel Forgerson
Will Kazakis
Jiby Mamen
Scott Neuhoff
Mihir Patel

*University of Illinois at Urbana-Champaign, Champaign, IL 61801*
*05/16/2016*

# TRIDENT Mission Design Team

Sabeeh Butt
Power/Structures/Configuration Engineer
AIAA Membership # 688514

Jiby Mamen
Communication and CDHS Engineer
AIAA Membership # 688755

Samuel Forgerson
Team Lead
AIAA Membership # 688123

Scott Neuhoff
Thermal / Risk Engineer
AIAA Membership # 688756

Will Kazakis
Trajectory and Propulsion Engineer
AIAA Membership # 688775

Mihir Patel
Science & Instrumentation/ADCS Engineer
AIAA Membership #688734

Zachary Putnam
Faculty Advisor

## Executive Summary

The T.R.I.D.E.N.T. (Triple Reconnaissance Impactors for the Development and Evaluation of Near-Earth asteroid Technologies) mission concept was developed in response to the AIAA Request for Proposal (RFP) entitled "Low-Cost Asteroid Precursor Mission." The RFP details a desire for a satellite mission to an asteroid as a means to collect data about asteroids to be used to aid in future mission development, both for human and robotic missions. The TRIDENT mission outlined in this document details such a mission that transports a science payload near the surface of an asteroid for data collection. That data is then returned to the ground for analysis and will provide researchers with information detailing the mechanical and morphological properties of the surface of the asteroid.

The following table details the four requirements explicitly stated in the RFP. These requirements ensure that missions designed for this RFP will produce relevant information on asteroids for researchers.

**Table 1.** Requirements derived from the RFP ensure validation of mission concept.

| Req. # | Requirement Text |
|---|---|
| 1.0 | The mission shall use a smallsat to conduct mission operations. |
| 2.0 | The mission shall perform a basic science mission. |
| 3.0 | The mission data collected shall be downlinked to the ground. |
| 4.0 | The mission cost shall not exceed $100,000,000 US FY$16. |

In addition to the above requirements, the RFP states that a goal of a precursor mission should be risk reduction for future missions. Considering this, the TRIDENT mission was developed to explore the mechanical and morphological properties of the surface of the asteroid. By understanding these properties better, researchers can better predict what will occur when a spacecraft or human interacts with the surface of the asteroid. This information is particularly relevant for the upcoming NASA Asteroid Redirect Mission (ARM). This mission, to be launched in December 2021, will see a spacecraft land on the surface of an asteroid, pick up a boulder, and move it to an orbit around the moon. While in lunar orbit, a second spacecraft carrying a human crew will rendezvous with the asteroid, collect samples, and conduct tests. ARM will involve both spacecraft and human interactions with portions of an asteroid, so data collected on what will occur during those interactions will help reduce the uncertainty, and therefore risk, associated with this part of the mission.

Once the primary goal of risk reduction and the requirements were identified, the TRIDENT science mission was developed to meet these goals. The following flow down chart in Figure 1 was used to determine the science objectives for this mission.

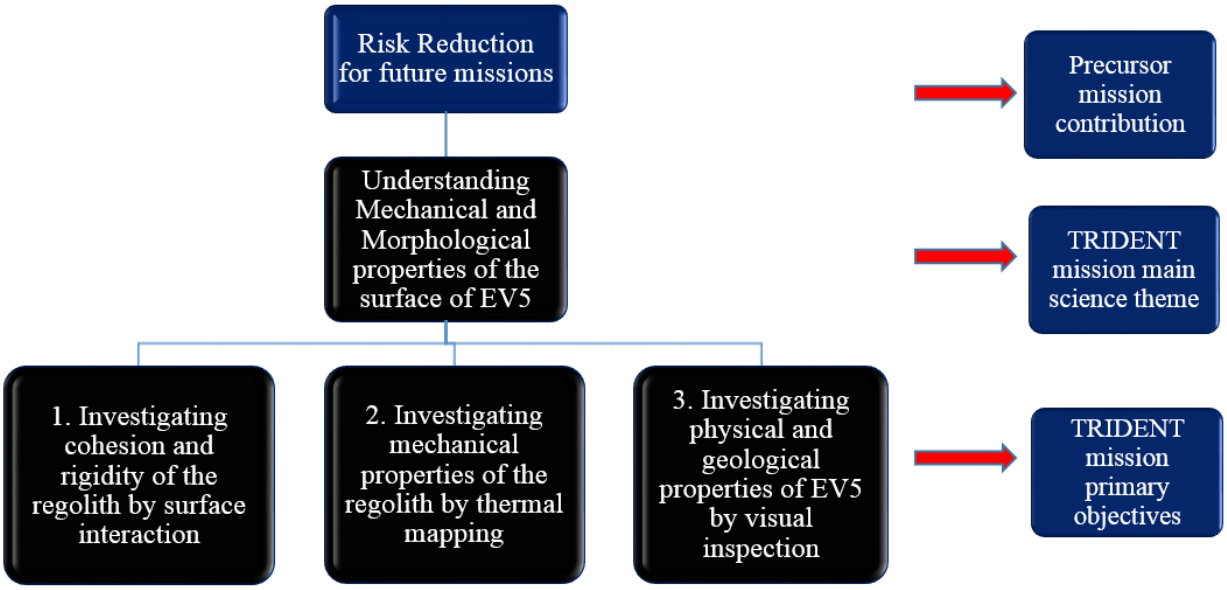


**Figure 1.** Science Requirement Derivation Flow Down

Objective 1 in Figure 1 was determined as vital to understanding the mechanical and morphological properties of the asteroid as it has been estimated that layers of dust, or regolith, exist on the surface of the asteroid. How much, and what effects it has on objects on the surface, is indeterminable with current ground based investigations. Understanding these two properties will reveal significant information relating to contact with the asteroid. It could be determined, for example, if landing on the surface of the asteroid is similar to landing on a beach or a boulder. By determining the thermal properties of the asteroid, Objective 2, deductions can be made about the composition of the asteroid. This again provides information regarding contact with an asteroid as, if a surface element can be identified, its physical properties are then known prior to reaching the asteroid. Finally, comprehensive images of the asteroid, Objective 3, will provide characteristics of the asteroid surface such as rock and boulder via visual inspection. These three objectives all provide information pertaining to gaining a more detailed understanding of the surface of the asteroid and its properties.

Having identified these three objectives, three science payload devices have been determined necessary to complete the science mission. A series of deployable penetrators and a High Resolution Camera (HRC) will be used to collect data regarding Objective 1. A thermal imaging spectrometer will create a thermal map of the asteroid for Objective 2. And finally, the framing camera will also be used to create a comprehensive map of the surface of the asteroid to meet Objective 3. This will provide ground teams with images, both thermal images as well as color photographs, of the surface of the asteroid from which specific results pertaining to each of the three primary science objectives can be determined.

In order to meet the requirements of the three primary science objectives, the following concept of operations was developed for the TRIDENT mission. Figure 2 shows the primary mission operations steps and these steps are discussed below. The target asteroid for this mission is the asteroid 2008 EV5. It is a near-Earth asteroid that is also a primary target for the ARM mission. By collecting data on EV5 in particular, the results can be viewed by members of the ARM team to reduce the risk of the ARM mission, whether the mission visits EV5 or another asteroid.

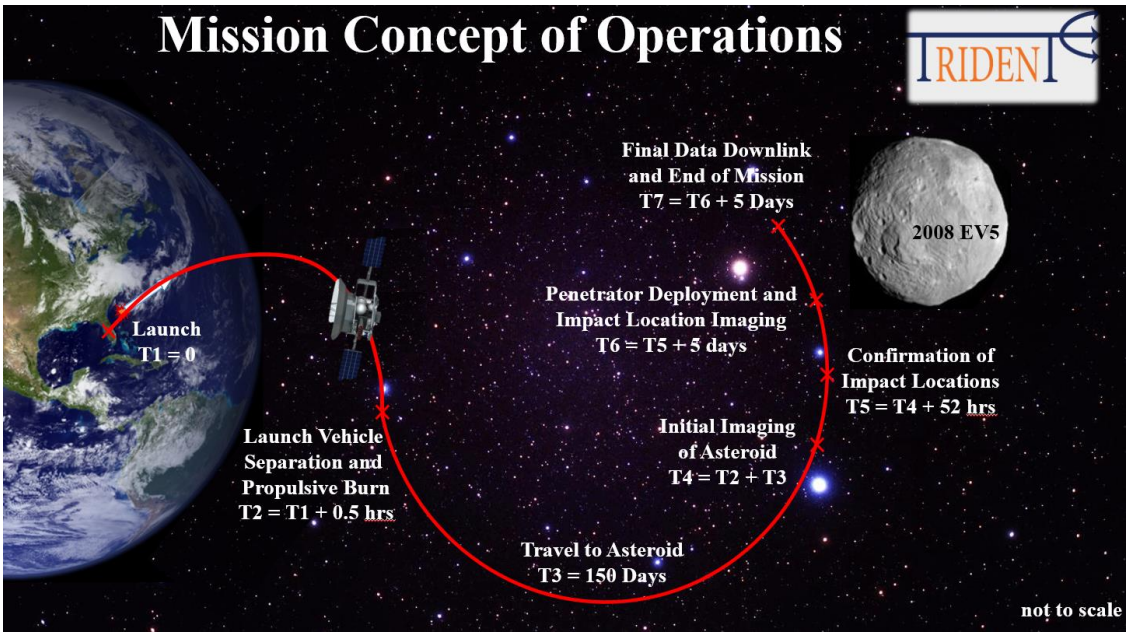


**Figure 2.** Mission con-ops highlights key mission events critical for mission success.

The TRIDENT mission launch will occur on Monday morning, August 2, 2019 from Cape Canaveral Air Force Station, Florida. The spacecraft will be onboard a Minotaur I rocket. The spacecraft

will travel to an altitude of 400 km where it will be ejected from the Minotaur. Following payload ejection, the spacecraft will conduct its first propulsive burn. This propulsive burn will allow the spacecraft to leave orbit around Earth and travel to the asteroid EV5. The travel time to the asteroid will take 150 days.

Upon reaching an altitude of 9.2 km from the surface of EV5, the spacecraft will conduct a second propulsive burn to control the spacecraft's approach. After completion of the burn, the science data collection phases will begin. Figure 3 below shows when each data collection phase occurs and the contents of each phase are described below.

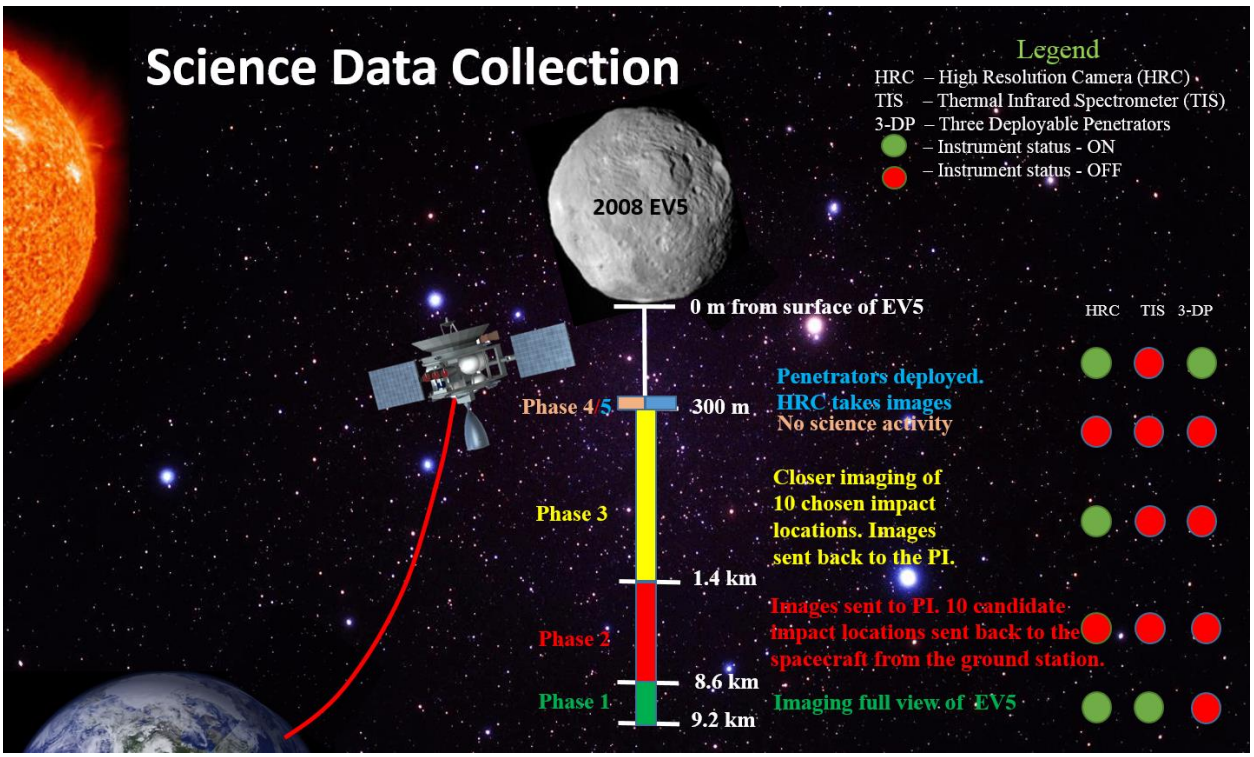


**Figure 3.** Concept of Operations of Science Collection optimized to minimize usage of DSN and meet science objectives.

At the beginning of Phase 1, the science instrumentation will be used to take preliminary images of the surface of the asteroid. Both the framing camera and the thermal imaging spectrometer will be operated for 4 hours as the spacecraft continues its asteroid approach. After 4 hours, the spacecraft will have traveled to an altitude of 8.6 km and the science payload will have imaged the entire surface of the asteroid. This will provide ground teams with all-encompassing maps, pictorial and thermal, of the surface

of the asteroid. The data will then be downlinked to the ground station via the Deep Space Network (DSN) as the spacecraft continues its slow approach, occurring during Phase 2.

At an altitude of 1.4 km, the beginning of Phase 3, the spacecraft will receive a series of coordinates on the surface of the asteroid from the ground station to investigate further. These coordinates identify possible penetrator contact sites that require additional imaging. The images will be collected as the spacecraft continues its approach. Once the spacecraft has reached an altitude of 300 m, a third propulsive burn will stop the approach of the spacecraft relative to the asteroid. The spacecraft will remain at this altitude while it finishes imaging the remaining penetrator sites. The spacecraft will downlink the images to the ground station, and wait for the final contact sites to be chosen in Phase 4.

Once the three penetrator contact sites have been chosen, the spacecraft will initiate a fourth and final propulsive burn to make a plane change relative to the orbital plane of the asteroid, beginning Phase 5. The spacecraft will traverse the asteroid over a 5-day period and the science payload will image the entire asteroid. The spacecraft will deploy the penetrators at the three locations determined by the ground station and image the entire process with the onboard camera, from approach through impact. The impactors will not contain any onboard technology and will be cylindrical components painted to differentiate them from the surface of the asteroid. The insertion depth will be calculated based on the length of the penetrator imaged by the spacecraft camera, and this information will be used to calculate the cohesiveness and rigidity of the surface of the asteroid. The spacecraft will have the ability to image the impact site a minimum of 3 additional times, acquiring additional data on the impact site post-impact. Periodically throughout Phase 5, data will be downlinked to the ground such that it can be continuously reviewed throughout the science data collection process. After all three penetrators are deployed and their impact sites imaged, the 5$^{th}$ and final science data collection phase is concluded.

After the final data downlink, the primary mission will be complete. The data returned to the ground station for analysis by this time includes color and thermal images of the surface of the asteroid and high-resolution images before, during, and after the impactor made contact with the surface of the asteroid. This

data will allow researchers to determine values associated with the three primary science objectives discussed above.

In order to meet the concept of operations described above and meet the RFP requirements from Table 1, the following spacecraft design has been developed. A 3D rendering of the TRIDENT spacecraft can be seen in Figure 4 below. The spacecraft has been designed to successfully transport the science payload to the asteroid 2008 EV5 and provide it both operable conditions upon arrival as well as the ability to return the collected data to the ground for review. The following paragraphs detail the onboard systems that provide these capabilities.

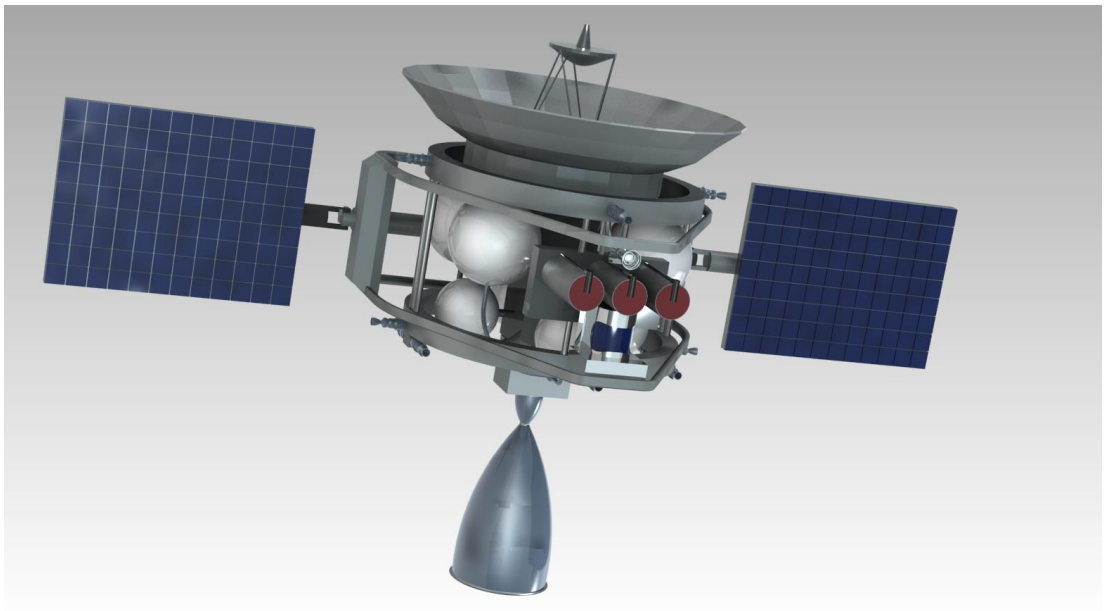

**Figure 4.** Deployed TRIDENT spacecraft capable of conducting science mission to meet primary science objectives and RFP requirements.

The spacecraft contains an onboard bi-propellant propulsion system to transport the spacecraft from its initially deposited Earth altitude of 400 km to its final altitude of 300 m from the surface of 2008 EV5. The system will use a MMH and NTO mixture and a 425 N thruster to provide the change in velocity required to make the maneuver. The system also includes an N2 pressurant system to maintain supply pressure for the duration of the mission. The system will be required to make the following three maneuvers during the mission: the initial burn to escape Earth's gravitational influence, the burn to alter the spacecraft

approach velocity to the asteroid, and the plane change required for Phase 5 of the science mission described above.

The spacecraft attitude determination and control system is capable of pointing the spacecraft in the directions necessary for solar panel use, communications downlink, and science data collection simultaneously. The system will be composed of a series of star trackers, an inertial measurement unit, and reaction wheels. The system will also be equipped with a reaction control system composed of 20 N and 1 N hydrazine thrusters, and hydrazine propellant for additional maneuvering capabilities.

The science payload, as well as a majority of the systems described here, requires power for the duration of the mission, when idle on in use. This lead to the design of an onboard power generation and distribution system capable of providing power to the various spacecraft systems. The power generation system consists of Li-ion primary batteries for initial power provisions and deployable solar arrays for continued power generation throughout the mission.

In order to maintain communication with the ground station, the spacecraft will have an onboard communications system capable of communicating through NASA's Deep Space Network. The onboard system will consist of both high and medium gain antennas for redundancy and transponders to allow for communication via the X-band. Communications will be periodic throughout the mission and will include both data downlinks as well as operational instruction uplinks. The spacecraft contains an onboard processor and solid-state data recorder that make up the onboard command and data handling system.

A passive thermal control system is also included onboard the spacecraft in order to maintain appropriate operating temperatures for the subsystems listed above. The system consists of varying amounts of multi-layer insulation that provide the spacecraft systems with a temperature range that falls within each systems' operating temperature range for the duration of the mission.

The TRIDENT mission schedule and management structure have been developed to provide the necessary time and resources required to begin mission operations on August 2, 2019. The schedule provides 3 years for mission design, development, spacecraft fabrication, test, and all other necessary steps prior to launch and allows 1 year to conduct mission operations. The TRIDENT mission will be led by a

Principal Investigator from the University of Illinois at Urbana-Champaign and a staff consisting primarily of university faculty and graduate students, who will be responsible for the mission planning and spacecraft development and fabrication. Additional support will be provided by the launch vehicle supplier, Orbital ATK, to coordinate launch planning and operations.

Throughout the mission design process, multiple risks have arisen and been mitigated in order to produce a highly reliable mission. A few of the primary risks identified with this mission include risk associated with the impact sites, non-optimal penetrator insertion, and inadequate camera resolution during Phase 5 of science data collection. These risks have been mitigated through mission design and hardware selection to have both a minimal likelihood and impact on mission success. Risks relating to impact sites (impact sites not being flat) and non-optimal penetrator insertion (penetrator does not enter regolith perpendicular to surface and remain perpendicular) are mitigated by the fact that any impact on any location on the asteroid will produce interesting results that can be used by researchers in determining asteroid characteristics. While impacts may not be ideal, they will still provide relevant information. Imaging resolution risk (the framing camera's ability to view the penetrators after impact) is mitigated by the opportunity for multiple image collection periods as well as the spacecraft's ability to maneuver closer to the asteroid if necessary.

For the TRIDENT mission to meet RFP requirements, the entire mission concept described above must be achievable for under $100 million US dollars. The TRIDENT mission concept is designed to meet the cost requirement while still providing adequate reserves to ensure mission success. Table 2 below details a breakdown of cost allocation in the TRIDENT mission design.

**Table 2.** TRIDENT mission provides relevant asteroid data while meeting the relatively stringent cost requirements of RFP.

| Mission Component | Cost FY$16 (Millions of US Dollars) |
|---|---|
| Spacecraft Design, Fabrication, and Test | $28.631 |
| Launch Vehicle Acquisition | $28.800 |
| Program Level Support | $16.601 |
| Operational Facilities and Support | $5.066 |
| Mission Operations | $4.196 |
| Total TRIDENT mission cost | $83.294 |
| Cost Reserves (%) | $16.659 (20%) |
| Actual TRIDENT mission cost | $99.953 |

The TRIDENT mission design has been developed to meet the requirements of the Low-Cost Asteroid Precursor Mission Request for Proposal with a high probability of success. The mission also provides relevant science data to be used by upcoming NASA missions relating to human and robotic exploration of near-Earth asteroids. The mission provides this data through a unique science data collection process and a spacecraft consisting of highly reliable, flight proven systems. The mission is also completed in a relatively short time span and on a tight budget, providing the relevant information quickly and at a low cost, making the TRIDENT mission a successful design for a low-cost asteroid precursor mission.

Table of Contents

I Fact Sheet ..... 11
II Proposed Science Investigation and Instrumentation ..... 12
II.A Introduction ..... 12
II.B Science Objectives ..... 12
II.C Science Instrumentation ..... 16
II.D Science Mission Operations ..... 20
II.E High Resolution Camera (HRC) Sizing ..... 23
II.F Conclusion ..... 25
III Mission Implementation ..... 28
III.A TRIDENT Mission Overview ..... 28
III.B Mission Concept of Operations ..... 30
III.C Mission Design and Trajectory ..... 35
III.D Propulsion System ..... 40
III.E Attitude Determination and Control System ..... 44
III.F Power System ..... 50
III.G Communications System ..... 57
III.H Command and Data Handling System ..... 61
III.I Thermal Control System ..... 63
III.J Structures System ..... 66
III.K Spacecraft Configuration ..... 69
III.L Assembly, Test, and Launch Operations ..... 78
III.M Management and Schedule ..... 80
III.N Anticipated Risks and Mitigation Strategy ..... 83
III.O Cost and Cost Estimating Methodology ..... 88
III.P Conclusion ..... 92
IV References ..... 94
V Acronyms ..... 98

# Triple Reconnaissance Impactors for Development and Evaluation of Near-Earth asteroid Technologies

## Improving Reliability on a Budget

Safety and reliability are the two major concerns facing human space missions. While increasing mission safety involves extensive development of human transportation methods, it also requires an extensive understanding of the destination, even before astronauts begin the trip. The TRIDENT mission will provide the necessary science knowledge to influence safety considerations and mission design prior to a human mission to a near-Earth asteroid. The data collected will provide information on the suitability of the visited asteroid for future human asteroid missions and information regarding the expected challenges of landing a spacecraft on an asteroid. The TRIDENT spacecraft will travel to the asteroid 2008 EV5 on a tight budget. All mission related activities will be completed for under $100 million, increasing safety and reliability of future missions for a fraction of the costs.

## Spacecraft Implementation

The following table details the major mission details and spacecraft characteristics

| Science Instrumentation | |
|---|---|
| **Scientific Data** | **Data Collection Method** |
| Imaging | Framing Camera |
| Composition Determination | Thermal Infrared Spectrometer |
| Landing Characteristics | 3 Deployable Low-Mass Penetrators, Camera |
| **Spacecraft Systems** | |
| **Subsystem** | **Implementation** |
| Propulsion | Bi-propellant |
| Power | Primary and Secondary Batteries with Solar Arrays |
| Communications | 1 High, 2 Medium-Gain Antennas |
| Thermal | Passive System |
| ADCS | 3-axis Controlled |
| **Launch** | |
| Launch Vehicle | Minotaur I |
| Launch Location | Cape Canaveral |
| **Spacecraft Transit** | |
| Total ΔV | 6.4 km/s |
| Travel Time | 150 days |

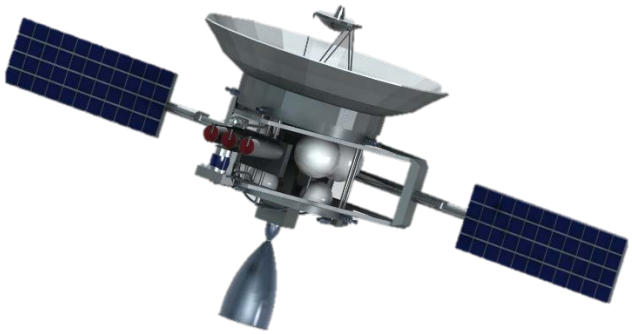

*TRIDENT spacecraft 3D CAD model representation*

## Why 2008 EV5?

2008 EV5, seen below, is a near-Earth asteroid and is the target for the TRIDENT mission. EV5 is in a near-circular orbit around the sun at a similar distance to that of Earth. It is the TRIDENT mission primary target because it is expected to be a carbonaceous asteroid that possibly contains water and is also the primary target for NASA's two-part, robotic and human, ARM mission to be launched in 2021. By reaching 2008 EV5 first, TRIDENT will be able to provide valuable information to influence the design of the robotic and human mission portions of ARM.

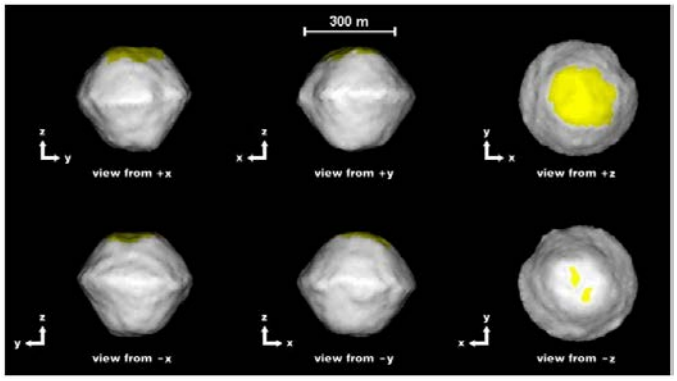


*From "Radar Observations and the Shape Near-Earth Asteroid 2008 EV5" by Busch, M.W. et al*

## Program Management

TRIDENT was designed and proposed by students at the University of Illinois at Urbana-Champaign (UIUC). Mission implementation is a collaborative effort with participation from UIUC students, faculty and members of Orbital ATK and NASA's Kennedy Space Center.

## II Proposed Science Investigation and Instrumentation

### II.A Introduction

As a strategic step towards human exploration of Mars, NASA has plans of exploring smaller bodies such as Near Earth Asteroids (NEAs) before advancing to the red planet. One upcoming mission for exploration of NEAs is the Asteroid Redirect Mission (ARM). ARM will serve as a proving ground for the technology needed for human missions to Mars. These include advanced propulsion techniques such as Solar Electric Propulsion (SEP), advanced trajectory and navigation techniques, advances in Extra Vehicular Mobility units, sample collection and containment techniques, and rendezvous and docking capabilities [1]. Important reasons to study NEAs include advantages of their geological properties, and understanding and influencing their orbital behavior to avoid potential collisions with Earth [1].

In order to achieve these objectives, robotic as well as human missions to NEAs are expected in the next twenty years. The TRIDENT mission aims to reduce risks involved in future missions to asteroids. In particular, the TRIDENT mission will explore the uncertainties involved in landing a spacecraft on the surface of an asteroid. This will be done by understanding the mechanical and morphological properties of the layer of regolith on the surface of the target asteroid, 2008 EV5.

### II.B Science Objectives

TRIDENT's science objectives are derived from the main science mission goals of understanding mechanical and morphological of the regolith on the surface of EV5. According to the report compiled by the Formulation Assessment and Support Team (FAST) for ARM, the only way to provide an accurate estimate of geotechnical properties is mechanical interactions with regolith on the surface of EV5 [2]. The

TRIDENT mission's science objectives are thus derived to understand the mechanical and morphological properties of the surface of EV5 as shown in Figure II.1.[2].

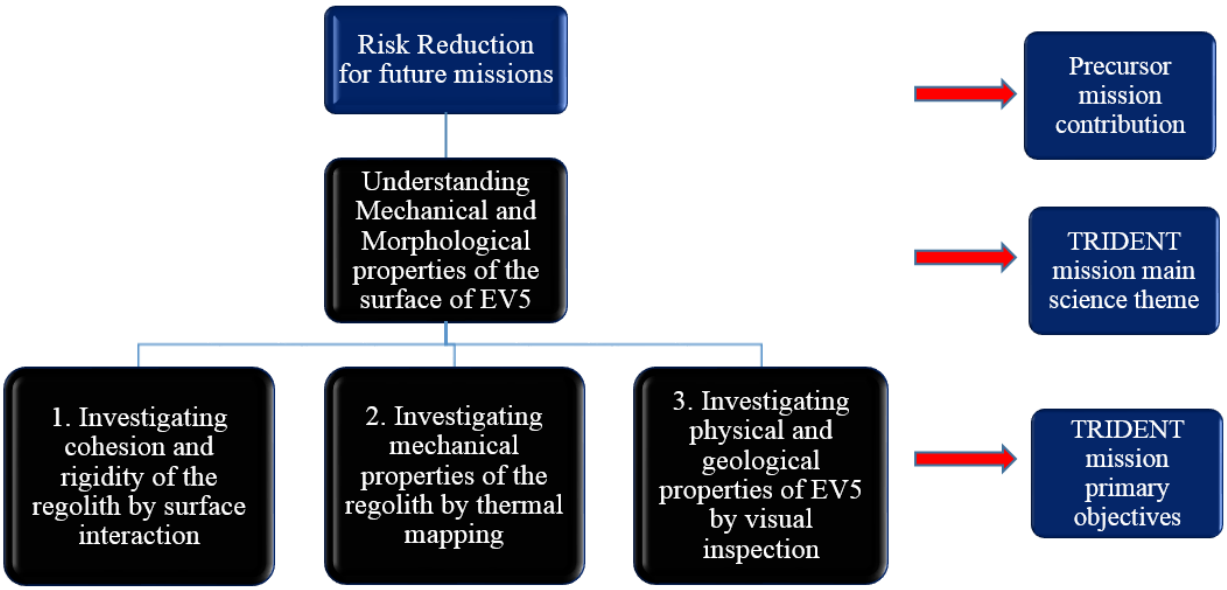


**Figure II-1.** Goals and requirements flow down for the science mission defines TRIDENT mission primary objectives.

### Objective 1: Investigating cohesion and rigidity of the regolith by surface interaction

TRIDENT will investigate rigidity and cohesiveness of the regolith on the surface of EV5. Understanding these properties is of great importance for the success of ARM as well as future missions that may include rovers, drills, or excavators. It is estimated that the majority of small asteroids such as EV5 are covered with a layer of dust made up of small particles that compose the regolith. It is also estimated that thermal fatigue causes rock withering and fragmentation that makes up the regolith [3]. Even though the presence of regolith is confirmed from previous missions, the depth, cohesion, and rigidity of such a layer needs to be studied to reduce risks for future missions.

The report compiled by FAST included a detailed analysis on the effects of surface geotechnical properties on the ARM spacecraft surface contact pads and also during the boulder extraction process. Knowing the surface cohesion properties will be particularly important during the boulder extraction process since the force needed to extract the boulder will be a sum of two forces: cohesive forces between

the surface particles and the inertial force, which will be a function of the acceleration the boulder achieves during the lifting process [3]. In relation to the design of contact pads, the regolith particles would need to be cohesive and rigid enough to prevent the contact pads from sinking into the surface. Therefore, the science done by TRIDENT in understanding the cohesion and rigidity properties of the regolith will be greatly beneficial to ARM and other future missions to EV5-type NEAs.

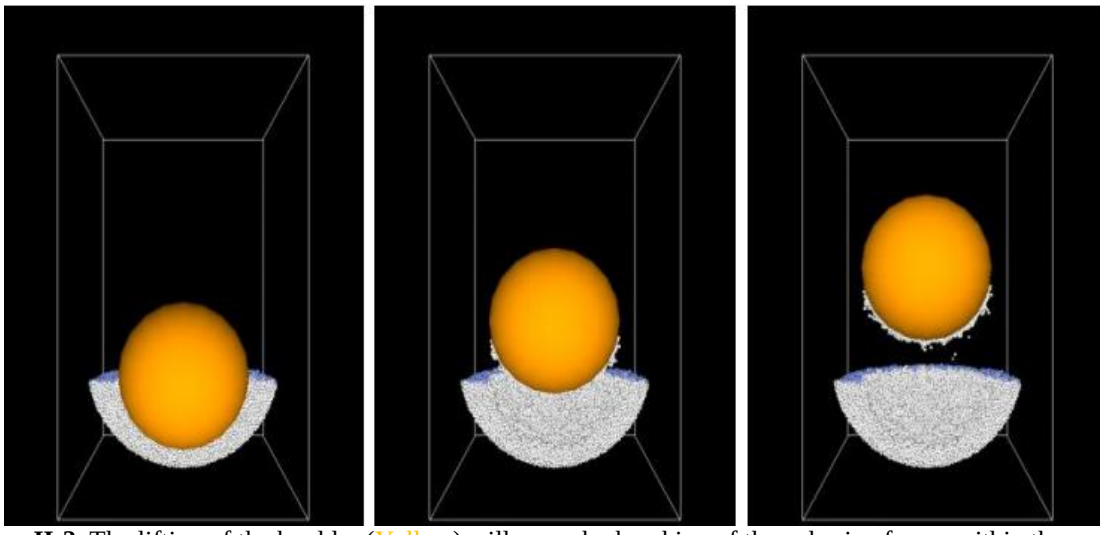

**Figure II-2.** The lifting of the boulder (Yellow) will occur by breaking of the cohesive forces within the regolith (white) **[3]**.

### Objective 2: Investigating mechanical properties of the regolith by thermal mapping

TRIDENT will investigate mechanical properties of the regolith by thermal mapping. The thermal properties of the asteroid play an important role in the formation of regolith. By investigating thermal properties of the surface, shape, size and compaction history of the regolith particles can be determined. In addition, cohesion between the regolith particles can be studied since it is a function of particle sizes, shapes and compaction history [3].

Another reason to investigate cohesion of regolith particles is to estimate the attraction forces between boulders and the surface of the asteroid. These estimated results of attraction between the boulder and the surface will be very important for ARM, whose primary objective is to lift a boulder from the surface of the asteroid and put it in an orbit around the moon. The report compiled by FAST for ARM mentions that the thermal inertia of boulders and the entire asteroid surface is indicative of their porous

versus solid characteristics. Furthermore, thermal observations over an asteroid's rotation period can distinguish between the thermal inertia of low density, porous aggregates and denser and stronger monolithic material [3]. Thus, investigating thermal properties of the regolith will help in determining potential landing locations for future missions to EV5.

### Objective 3: Investigating physical and geological properties by visual inspection

TRIDENT will survey physical and geological properties of EV5 by visual inspection. Physical properties will include investigating the asteroid's size and spin state. Geological mapping will include determining locations of boulders, areas suitable for drilling or excavating and areas that pose significant risks to future human or robotic missions.

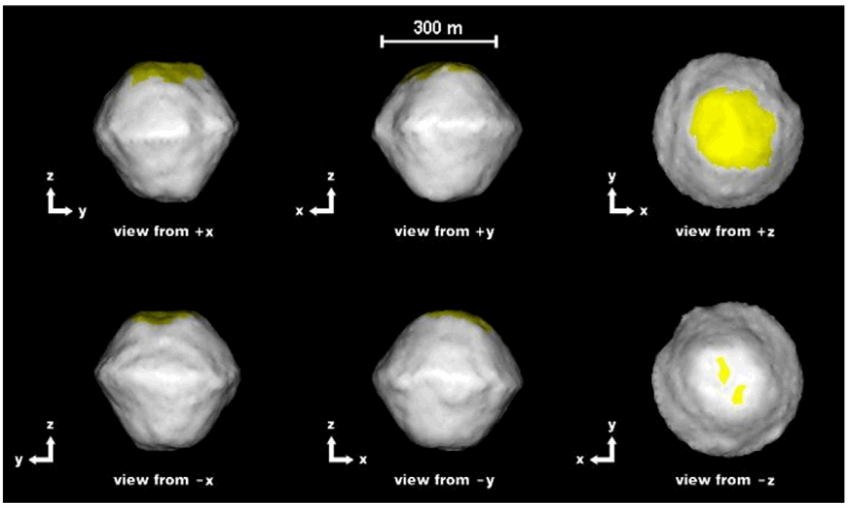


**Figure II-3.** The shape model of EV5 developed by using observations from the Arcebo planetary radars. The accuracy of this model will be verified by TRIDENT.

Knowing spin states of NEAs is important, as it is representative of the asteroid's future orientation and position along its trajectory. ARM and other potential future missions to EV5 will incorporate a docking or landing aspect. To ensure a safe docking or landing maneuver, knowing the orientation and position of the asteroid is necessary. In December 2008, the spin state of EV5 was observed to be of retrograde nature as shown in Figure II-3. The technique used in this observation is known as speckle tracking which, in principle, is tracking the motion of speckle patterns of the radar induced by incoming radar echo from the asteroid [4]. Even though these observations are helpful, they are still estimates and need to confirmed from

a closer distance. Additionally, it is estimated that the next opportunities for radar imaging of EV5 will occur during its closest approach in 2023 and 2039. Planning a mission using radar data from 2008 may be dangerous because of consequences of the Yarkovsky effect, which can alter the orbit due to forces imparted on the asteroid by emission of thermal photons [2]. TRIDENT will provide useful information to compensate for Yarkovsky effects on the orbit of EV5.

Through science instruments on board the spacecraft, the TRIDENT mission will provide visual images of EV5 that will identify areas with boulders, areas of scientific importance and areas with rough terrain that should be avoided by future missions to EV5. Furthermore, visual images of boulders can help in estimating their strength. For example, boulders' angularity and fractures can be the result of thermal shock and that in effect may be a measure of its strength. More angularity may mean that the boulder is stronger while if a boulder is rounded, it may be a sign of weakness [2]. Thus visual images determining the asteroid's spin state and geographical mapping would serve as an important factor in reducing risks for future human or robotic missions to EV5.

### II.C Science Instrumentation

#### Overview

The TRIDENT mission's instrumentation package will include three main components: a high-resolution camera (HRC), a Thermal Infrared Spectrometer (TIS) and three small cylindrical penetrators. The relationship between the science instruments and science goals for TRIDENT mission is shown in Figure II.4. Additionally, the configuration of science instruments on the TRIDENT spacecraft is shown in Figure II-. They are strategically places on the spacecraft to make sure the optical instruments get appropriate field of view of the asteroid and also meets requirements for the penetrators. The main objective of the science instruments is to investigate mechanical and morphological properties of the regolith, particularly cohesion and rigidity. This will be done by processing and combining data collected from the HRC and the TIS.

Once near EV5, the HRC will look for appropriate areas for the penetrators to impact. Once the penetrators are inserted into the surface, images of the inserted penetrators will be taken by HRC. Using

these images, the depth of penetrator insertion will be observed resulting in the computation of resistive forces imparted by the regolith on the penetrators. Furthermore, after combining this information with the TIS data about shapes and sizes of the regolith particles, conclusive results of rigidity and cohesion of the regolith will be estimated.

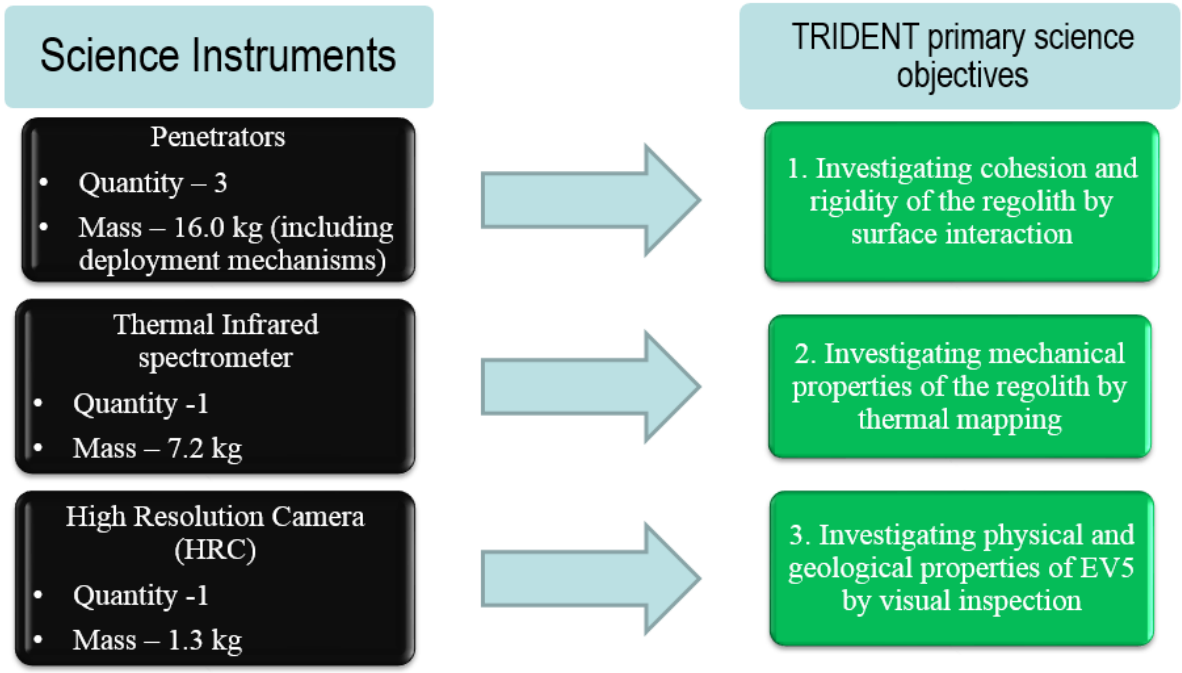


**Figure II-4.** TRIDENT's science instrumentation will effectively meet the mission science objectives.

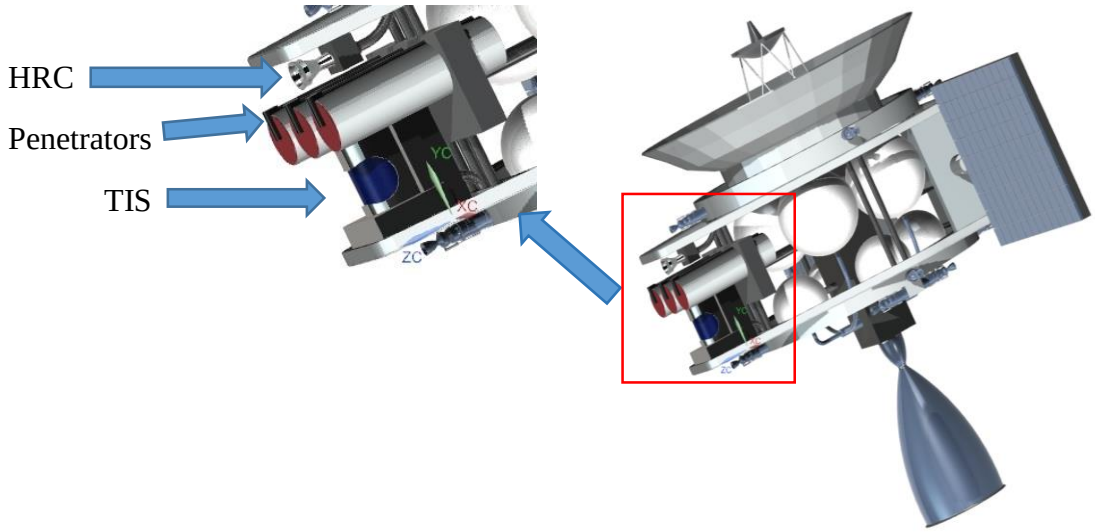


**Figure II-5.** TRIDENT's science payload will be strategically placed to minimize attitude adjustments made during science data collection.

**Penetrator Design**

The design of the penetrators on the TRIDENT mission is derived from penetrometer probes used by Russia on the Venera mission and by the European Space Agency on the Rosetta mission [2] [4]. One major change from the penetrometer design is that the penetrators employed by TRIDENT will be unintelligent; there will be no onboard electronics. That is why they are called penetrators and not penetrometers. The simplified design of these penetrators is preferred to make them cost efficient and low risk instruments.

All three penetrators will have identical designs. A Computer Aided Design (CAD) model of a penetrator and their deployment mechanisms is shown in Figure II-4. In the figure, on the left, Penetrator (not-visible) is enclosed inside the deployment mechanism, in the middle, a Penetrator without the housing is shown and on the right, spring needed to impart the necessary force to achieve a desired deployment velocity is shown. The pointed edge on one side of these penetrators will help in displacing surface material away from their path on the surface of the asteroid and thus achieving an effective insertion. Each penetrator will be a cylinder with a total length of 0.30 m and a diameter of 0.10 m.

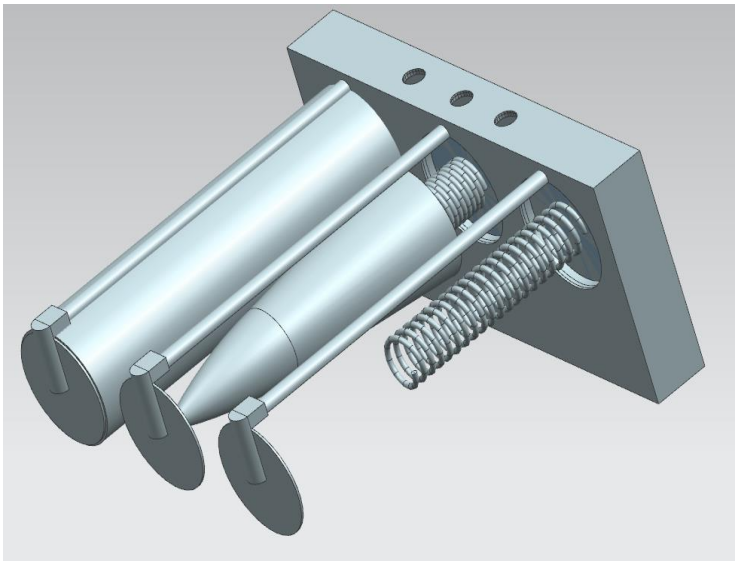

**Figure II-4.** Penetrator and deployment mechanism utilizes simple design concepts.

The design of penetrators will be simple in a sense that these penetrators will be just cylindrical masses of metal. Therefore, there won't be much investment involved in manufacturing the penetrators. Instead, a significant effort will be put forth in the testing phase. The testing phase will include investigating additional impacts that the penetrators might have on the spacecraft during and post-deployment. A majority of these are already taken in account in Section III.L.

Another way in which the penetrators are simplified is as previously mentioned, the absence of onboard electronics. Therefore, power, communications and thermal control constraints are minimal. This design minimizes risk and cost by a great amount. A significant requirement put forth by this design of penetrators is on the imaging involved after they are inserted in the regolith. This requirement and its mitigation is discussed in more detail in Section II.E.

**Deployment**

The deployment of the penetrators will be a very important part of the mission and thus a minimal risk deployment mechanism will be used to launch them from the spacecraft. A deployment mechanism similar to a Poly Pico-Satellite Orbital Deployer (P-POD), which is used for deploying CubeSats, will be designed. A P-POD employs a spring mechanism to release the CubeSat from the "housing." A similar design will be used by TRIDENT to house the three penetrators. The springs will be designed to impose

appropriate velocity at deployment to ensure an effective penetration in the regolith of the asteroid. This velocity and the attitude of the penetrators is expected to be constant all the way until the impact due to no atmospheric effects and negligible gravity. In order to avoid the penetrator to bump the door of the housing of the deployment mechanism, the doors will be opened a minute before the deployment of the penetrators. Additionally, the disturbance imparted on the spacecraft due to deployment of penetrators is analyzed in detail in Section III.E.

### II.D Science Mission Operations

TRIDENT's science data collection process will be divided into five main phases. In this section, we present a detailed description of science data collection. A concept of operations image of this process is shown in Figure II-5.

#### Phase 1: Approach at EV5

Phase 1 of science data collection will take place at a distance from 9.2 km to 8.6 km from the surface of the asteroid. This distance is based on the HRC specifications during which it will have a full view of EV5. The requirement is to map at least 70% of the asteroid because mapping EV5's poles would be difficult due to its curvature and unknown rotation. The spacecraft will be travelling at 0.04 m/sec relative to EV5 and will spend approximately 4 hours in this phase.

During this phase, EV5 will complete one rotation and thus, the HRC will have a chance of imaging the entire asteroid. Any imaging of the poles due to the rotation of EV5 will be a "plus" for the mission. In addition, TIS will be turned on to collect data because it will also have a maximum view of the asteroid in this phase.

#### Phase 2: Selection of Impact location

During Phase 2, the spacecraft will be slowly coasting towards the asteroid at a speed of 0.04 m/sec. Phase 2 will take place at a distance from 8.6 to 1.4 km from the surface of the asteroid. The total time spent in this phase will be 48 hours. During this time, the images collected in Phase 1 will be sent back to the ground station for the Principal Investigator (PI) to choose appropriate impact sites. The main criteria for

choosing the impact site will be locations with flat surfaces. These flat surfaces will be analogous to the areas on which the contact pads of the ARM spacecraft will be expected to land. Even though only three potential locations are needed for the three penetrates to impact, the list compiled by the PI will be more than three. This is a safety precaution in case, on a closer inspection, a candidate location is deemed an inappropriate impact location. The candidate locations will be sent back to the spacecraft towards the end of this phase.

### Phase 3: Impact area verification

In this phase, the spacecraft will be coasting slowly towards the asteroid to an altitude of 300 m. The total duration of this phase will be 12 hours, which will include 7 hours of travel time from 1.4 km to 300 m from the surface of EV5 and inertial hovering at 300 m for 5 hours. During the 7 hours of traveling, the spacecraft will have further opportunities to image the impact locations chosen by the PI. The images of these specific locations will be again sent to the PI at the ground station for further analysis. This analysis will involve cutting down the impact locations to three. The PI will choose locations that do not involve extra spacecraft maneuvers to avoid complications while still ensuring that the locations are appropriate for penetrator impact.

### Phase 4: Final impact locations uplink

This phase will involve the spacecraft to be idle at 300 m from the surface of the asteroid. The science instruments will be off and only the essential systems on the spacecraft will be running. During this phase, the final impact locations to the spacecraft from the ground station will be uplinked. Due to uncertainty in the availability of DSN, the spacecraft will spend five days at this location during which time the science team will choose the final three impact locations.

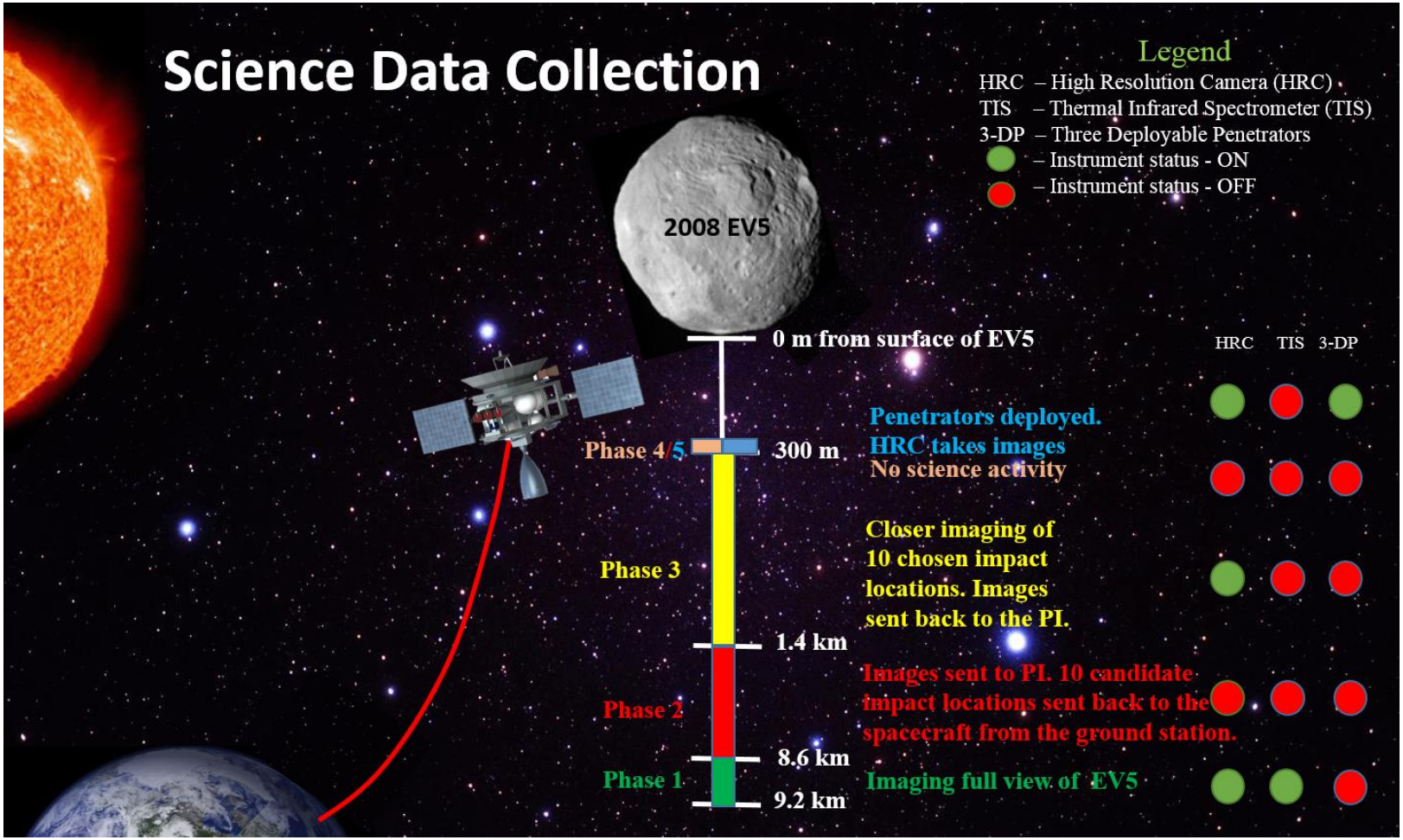


**Figure II-5.** Science data collection phases are designed to meet mission science objectives derived in **Table II.1**

### Phase 5: Penetrator Deployment and Imaging

Once the impact locations are received by the spacecraft, it will perform a plane change maneuver to get to its first impact location. This maneuver will be based on the locations of all three impact sites and their arrangements across the asteroid. The two most important events of this phase will be the penetrator deployment and post-insertion imaging of the penetrators. In the following section, we focus on the post insertion imaging of the penetrators 300 m above the surface of the asteroid.

The penetrators will be appropriately configured to make sure they impact vertically on the surface and with pointed edges facing the surface of the asteroid. It is desired for the penetrators to impact vertically to achieve maximum insertion and to avoid the problem of them falling over. The imaging of the penetrator's post insertion on the surface of the regolith will be the most important part of the mission. The depth of the inserted penetrators will be a function of the resistive forces imparted by the regolith. This is depicted in Figure II-6.

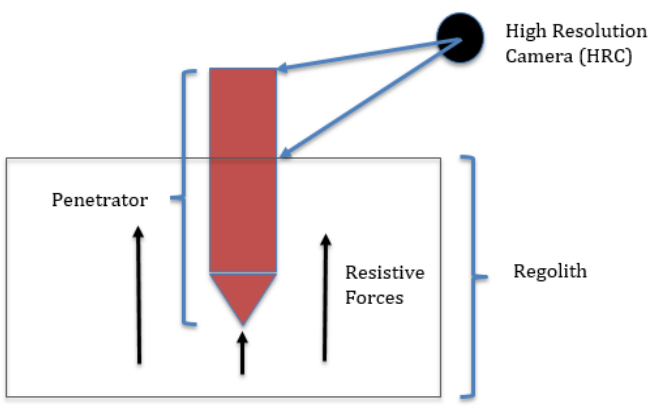


**Figure II-6.** The penetrator insertion depth imaged by the HRC will help in determining the resistive forces imparted by the regolith

### II.E High Resolution Camera (HRC) Sizing

The driving factors of the required camera are the result of two scenarios: 1) imaging from directly above the inserted penetrator and 2) imaging from an angle to measure the insertion depth of the penetrator. Imaging from directly above the inserted penetrator will verify that the penetrator impacted perpendicular to the regolith. If not, then using this image the angle at which insertion happened can be observed and

“actual insertion” depth can be calculated by doing simple geometry. On the other hand, imaging the penetrator from an angle will give the lateral view of the penetrator. This image will give us the depth of insertion in either case of perpendicular insertion or an insertion at an angle.

In order to “recognize” an object in an image, at least six pixels should be covered by an object in the image [5]. Therefore, to image the penetrator inserted in the regolith from an altitude of 300 m, the requirements on the HRC are described in Figure II-7. The analysis done in this figure is representative of the two imaging scenarios mentioned above. In scenario 1, from an altitude of 300 m from the surface of the asteroid, in a 1280 × 780 image, the penetrator will cover approximately 8.15 × 4.58 pixels when it impacts perpendicular to the surface. This resolution might change in the event if a penetrator impacts at an angle. On the other hand, in scenario 2, we get the same resolution but this image gives a minimum view of 0.2 m depth of the inserted penetrator. Therefore, this analysis proves that the required variable that is depth of insertion of a cylindrical penetrator to investigate the cohesion and rigidity of the regolith can be easily obtained.

In order to meet the above-mentioned requirements for an imaging system, a spaceflight proven imaging system will be supplied by Malin Space Science Systems (MSSS). MSSS is a leader in supplying imaging systems for government and commercial aerospace customers. The cameras designed by MSSS have been flown on various high-profile NASA missions including 2001 Mars Odyssey, Mars Reconnaissance Orbiter, and Phoenix lander [6]. The inquiry of the narrow angle lens required by the TRIDENT mission was received positively by an MSSS associate who also supplied us with the cost estimate of the instrument. The cost information is supplied in Section III.O.

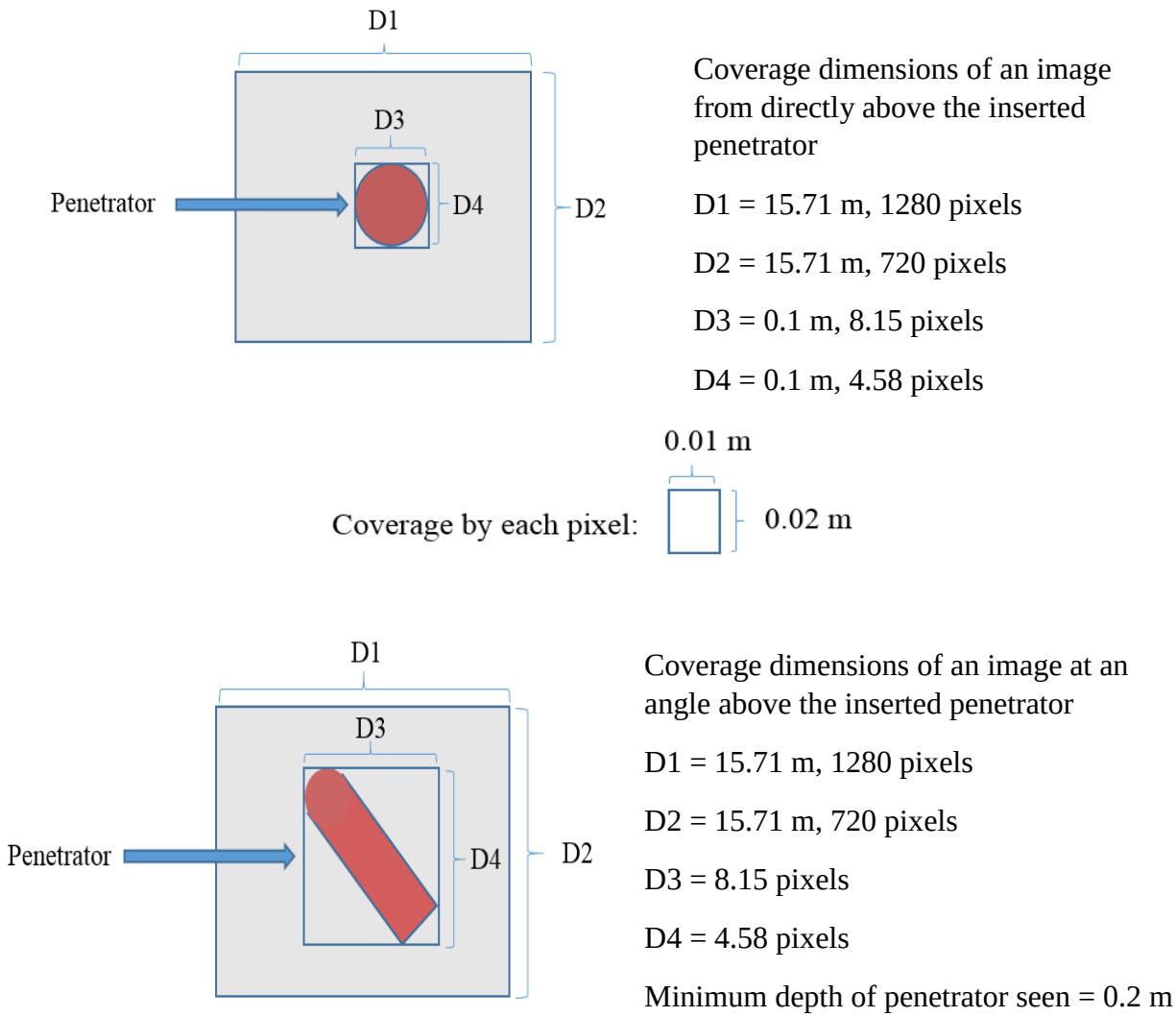


**Figure II-7.** Penetrator post-insertion imaging drives camera sizing and capability requirements.

### II.F Conclusion

The TRIDENT mission's science objectives are derived from the science requirement of investigating mechanical and morphological properties of EV5. In particular, TRIDENT will investigate cohesion and rigidity of the regolith on the surface of EV5. TRIDENT will employ a High Resolution Camera (HRC), Thermal Infrared Spectrometer (TIS) and three deployable penetrators. The main objective of investigating cohesion and rigidity will be achieved by analyzing force imparted on the penetrators by the regolith and thermal data captured by the TIS. In Table II.1, to summarize the science and

instrumentation of the TRIDENT mission, a science traceability matrix is provided. It provides the link between NASA planetary exploration objectives, TRIDENT mission science objectives and TRIDENT mission science instrumentation. As it can be seen from the table, NASA has great interests in exploring NEAs and in the process, develop technologies needed to carry out crewed missions to Mars. In fact, two out of three potential 'pathways' to Mars mentioned in NASA's planetary decadal survey involves visiting NEAs to develop the technologies needed to carry out crewed missions to Mars.

Apart from being an integral part of NASA's Journey to Mars, another critical reason to study these near Earth asteroids is to understand their orbital behavior. Being close to the Earth, these objects pose a significant risk of potentially entering Earth's atmosphere and colliding with the surface.

**Table II.1.** Traceability matrix links science payload to requirements derived from RFP and broader NASA goals **[7] [8]**

| | |
|---|---|
| NASA's Near Earth Asteroid (NEA) exploration goals derived from NASA Pathways to Exploration, NASA Vision and Voyages for Planetary Science decadal survey and Formulation Assessment and Support Team report | ➢ Conduct robotic and human missions to NEA as stepping stone missions towards an ultimate mission to Mars.<br>➢ Understand and influence orbital behavior of NEAs to keep them from drifting into Earth's orbit and colliding with it.<br>➢ Investigate challenges involved in landing of rendezvousing space vehicles in deep space through ARM. |
| TRIDENT mission objective | ➢ Determine uncertainties involved in landing a spacecraft on a NEA |

| Science Objectives | Measurement objectives | Measurement requirements | Instruments | Instrument Requirements | Data Products |
|---|---|---|---|---|---|
| **Investigating cohesion and rigidity of the regolith by surface interaction** | Quantitative and qualitative analysis of cohesion and rigidity of the surface | Measure the resistive forces imparted by the surface on a surface interacting instrument<br><br>Image the penetrators at a from an altitude of 300m above EV5 | 3 cylindrical deployable penetrators<br><br>High Resolution Camera (HRC) | Velocity 45 m/sec<br>Pointing accuracy 0.05<br><br>Spatial resolution 0.01×0.02 m/pixel | Resistive forces imparted by the regolith that characterize the cohesiveness and rigidity of the surface of EV5. |
| **Investigating mechanical properties of the regolith by thermal mapping** | Measure thermal properties of EV5 | Produce a thermal map of the asteroid | Thermal Infrared Spectrometer | Wavelength 5-10 $\mu m$<br><br>Spatial resolution 0.5 m/pixel | Thermal map of the asteroid |
| **Investigating physical and geological properties of EV5 by visual inspection** | Image EV5's spin state, locations of boulders and flat surfaces and image the inserted penetrators on the surface | Image the asteroid from an altitude of 8.6 km above EV5 | High Resolution Camera (HRC) | Spatial resolution 0.35×0.62 m/pixel | Map of the asteroid and images of the inserted penetrators |

# III Mission Implementation

## III.A TRIDENT Mission Overview

### Introduction

The T.R.I.D.E.N.T. mission concept described in this document was designed to meet the requirements defined in the Request for Proposal (RFP) for a Low-Cost Asteroid Precursor Mission. T.R.I.D.E.N.T. stands for the Triple Reconnaissance Impactors for Development and Evaluation of Near-Earth asteroid Technologies. The TRIDENT mission shall maneuver a small spacecraft to a near-Earth asteroid to investigate the mechanical and morphological properties of said asteroid. The spacecraft will acquire this information by using the onboard science payload described previously in Section II to collect and return data to ground stations for analysis. The findings from this mission will be utilized by future missions for reducing uncertainty associated with asteroid-spacecraft interactions.

The asteroid to be investigated by this mission is 2008 EV5. EV5 is a carbonaceous asteroid with a near-circular orbit similar to that of Earth [2]. EV5 is also the reference target for NASA's ARM, scheduled to launch in late 2021. ARM will be the first human asteroid exploration mission conducted by NASA. EV5 is a primary candidate based on predicted asteroid composition and boulder availability, a necessity for the mission design [2]. The TRIDENT mission, in order to be a precursor asteroid mission per the RFP title, will collect data on EV5 prior to launch of the ARM. This would allow the data to be used by the ARM team to reduce the risk and uncertainty associated with the boulder retrieval process.

### TRIDENT Mission Driving Requirements

Risk reduction for future asteroid missions, human or robotic, was identified as a primary goal for the TRIDENT mission concept. As a precursor mission, TRIDENT has the opportunity to provide valuable insight into what occurs when a spacecraft makes contact with an asteroid. This information will be valuable for a wide variety of future missions at a relatively low cost, particularly the previously mentioned ARM mission. From the RFP, four key requirements were identified for the low-cost asteroid precursor mission and are listed in Table III.1 below.

**Table III.1.** Primary mission requirements identified from RFP to ensure mission success meets proposal requirements and goals **[1]**.

| Requirement # | Requirement Text |
|---|---|
| 1.0 | The mission shall use a smallsat to conduct mission operations. |
| 2.0 | The mission shall perform a basic science mission. |
| 3.0 | The mission data collected shall be downlinked to the ground. |
| 4.0 | The mission cost shall not exceed $100,000,000 US FY$16. |

From these four top-level requirements and the primary goal of risk reduction for future asteroid missions, the requirements in Table III.2. below were derived. These requirements were identified to help drive the design process to ensure that a successful TRIDENT mission coincided with successfully meeting requirements of the RFP. More details pertaining to how each requirement is met can be found in the sections pertaining to individual systems. The requirements below pertaining to the basic science mission (Requirements 2._) were previously addressed in Section II.

**Table III.2.** Derived requirements drive design towards meeting goals and requirements identified by NASA and the RFP.

| Req. | Requirement Text |
|---|---|
| 1. | The mission shall use a "smallsat" to conduct mission operations. |
| 1.1 | The total mass of the spacecraft shall not exceed 500 kg. |
| 1.2 | The launch vehicle shall provide spacecraft deployment into orbit around the Earth for a spacecraft with a mass of 500 kg. |
| 1.3 | The spacecraft shall transport the science payload to an altitude of 300 +/- 10 m from the surface of the asteroid. |
| 1.4 | The spacecraft shall maintain payload operating conditions for a minimum of 1 year after launch. |
| 1.4.1 | The spacecraft shall provide attitude determination and control of the science payload for a minimum of 1 year after launch. |
| 1.4.2 | The spacecraft shall provide thermal control and protection for the science payload for a minimum of 1 year after launch. |
| 1.4.3 | The spacecraft shall provide power to the science payload for a minimum of 1 year after launch. |
| 1.5 | The spacecraft shall have a total volume less than 3.314 cubic meters. |
| 2. | The mission shall perform a basic science mission. |
| 2.1 | The science data collected shall provide the mechanical and morphological properties of the surface of the asteroid. |
| 2.1.1 | The science data collected shall provide the rigidity and cohesiveness of the regolith on the surface of the asteroid. |
| 2.1.2 | The science data collected shall provide information regarding the compositional and thermal properties of the surface of the asteroid. |
| 2.1.3 | The science data collected shall provide images of the surface of the asteroid. |
| 3. | The mission data collected shall be downlinked to the ground. |
| 3.1 | The spacecraft shall provide onboard systems to return data to the ground station during mission operations. |
| 3.1.1 | The spacecraft shall provide onboard data storage for data retention prior to data downlink. |
| 3.1.2 | The spacecraft shall provide periodic link capabilities to the ground through the Deep Space Network during mission operations. |
| 4 | The mission cost shall not exceed $100,000,000 US FY$16. |
| 4.1 | The mission cost budget shall include a minimum cost reserve of 15% of total mission costs. |
| 4.2 | The mission development through launch phases shall not exceed a duration of 3 years. |
| 4.3 | The mission development through launch phases shall include a minimum schedule margin of 10% of the development duration along the mission critical path. |
| 4.4 | The mission launch through operations phases shall not exceed a duration of 1 year. |
| 4.5 | The mission launch through operations phases shall include a minimum schedule margin of 10% of the operations duration. |

### III.B Mission Concept of Operations

## Concept of Operations

The primary requirements listed previously state that a small satellite design (one weighing less than 500 kg [9]) will conduct an asteroid science mission. The requirements also state that the mission will provide the ground station with the data collected and that the entire mission will be completed with a price

tag under $100 million US dollars (Reqs 1.-4.). In order to meet these requirements, the following concept of operations (con-ops) was developed. Figure III-1 shows the primary mission operations steps and these steps are discussed in more detail below.

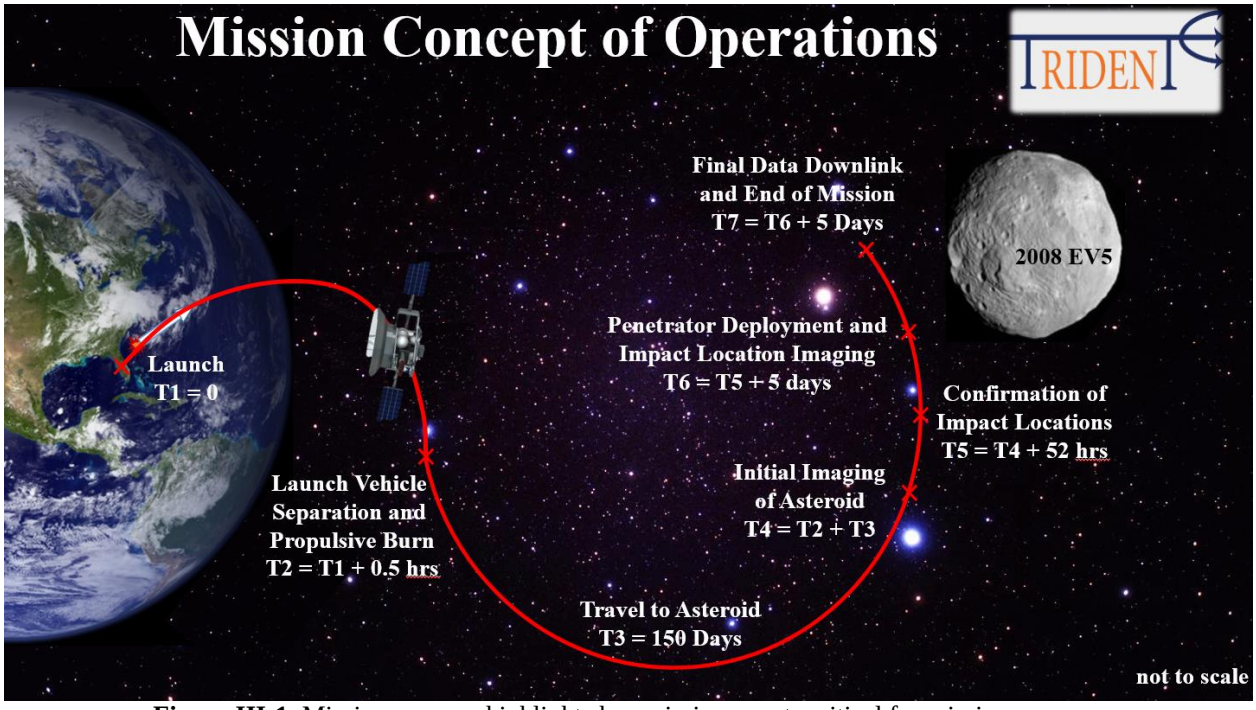


**Figure III-1.** Mission con-ops highlights key mission events critical for mission success.

The TRIDENT mission launch will occur on Monday morning, August 2, 2019 from Cape Canaveral Air Force Station, Florida. The spacecraft will be onboard in the payload fairing of a Minotaur I rocket (supplied by Orbital ATK). The spacecraft will travel in the payload fairing to an altitude of 400 km from the surface of Earth where it will be ejected from the Minotaur. Following payload ejection, the spacecraft will conduct its first propulsive burn, imparting a $\Delta V$ of 2.13 km/s. This propulsive burn will allow the spacecraft to leave orbit around Earth and travel to the asteroid EV5. The travel time to the asteroid will take 150 days.

Upon reaching an altitude of 9.2 km from the surface of EV5, the spacecraft will conduct a second propulsive burn to slow the spacecraft's approach. After completion of the burn, the science instrumentation will be used to take preliminary images of the surface of the asteroid. Both the framing camera and the

thermal imaging spectrometer will be operated for 4 hours as the spacecraft continues its asteroid approach. After 4 hours, the spacecraft will have traveled to an altitude of 8.6 km and the science payload will have imaged the entire surface of the asteroid. EV5 has a rotational period of 3.725 hours and, at altitudes greater than 8.6 km, the camera and spectrometer are capable of keeping the entire asteroid in the frame of their images. This will allow both instruments to generate all-encompassing maps, pictorial, and thermal respectively, of the surface of the asteroid. The data will then be downlinked to the ground station via the Deep Space Network (DSN) as the spacecraft continues to slow its approach.

At an altitude of 1.4 km, the spacecraft will receive a series of coordinates on the surface of the asteroid to investigate further. These coordinates identify possible penetrator contact sites that require additional imaging to ensure optimal impact sites. The images will be collected as the spacecraft continues its approach. However, once the spacecraft has reached an altitude of 300 m, a third propulsive burn will stop the approach of the spacecraft relative to the asteroid. The spacecraft will remain at this altitude and relative velocity while it finishes imaging the remaining penetrator sites, downlinks the images to the ground station, and waits for the final contact sites to be chosen.

Once the three penetrator contact sites have been chosen, the spacecraft will initiate a fourth and final propulsive burn to make a plane change relative to the orbital plane of the asteroid. Due to the lack of gravity and the rotation of the asteroid, the spacecraft will traverse the asteroid over a 5-day period and the science payload will image the entire asteroid without a need for additional maneuvers. The spacecraft will deploy the penetrators at the three locations and image the entire process, from approach to impact. The impactors will not contain any onboard technology and will be cylindrical components painted to differentiate them from the surface of the asteroid. The insertion depth will be calculated based on the length of the penetrator imaged by the spacecraft camera and this information will be used to calculate the cohesiveness and rigidity of the surface of the asteroid. The spacecraft will have the ability to image the impact site a minimum of 3 additional times, depending on rate at which the spacecraft is traversing the asteroid. After all three penetrators are deployed and their impact sites imaged, the spacecraft will downlink the final data collection to the ground for analysis.

After the final data downlink, the primary mission will be complete. The data returned to the ground station for analysis by this time includes color and thermal images of the surface of the asteroid and high-resolution images before, during, and after the impactor made contact with the surface of the asteroid. This data will allow researchers to determine the rigidity, cohesiveness, and composition of the surface of the asteroid while also generating color and thermal maps of the asteroid. With additional funding, the mission would have an opportunity to expand as the spacecraft will remain in close proximity to EV5 after mission completion. The spacecraft will have the capabilities to continue to send back color and thermal images of the surface of the asteroid until spacecraft system failure prohibits data collection and transmission.

## TRIDENT Spacecraft Definition

The TRIDENT spacecraft will transport the science payload to a distance of 300 m from the surface of EV5. The spacecraft will provide onboard communication, attitude determination and pointing control, propulsive maneuverability, power generation, data storage, and thermal protection capabilities for the duration of the mission. These capabilities will provide the science payload with the appropriate operating conditions for data collection and transmission. Table III.3 below shows the mass allocation of the spacecraft as it relates to each of the systems in the full assembly. Table III.4 then verifies that each requirement relating to system mass is met by the TRIDENT mission design. Details pertaining to mass allocations within each system can be found in each systems subsection throughout the remainder of this document.

**Table III.3** Spacecraft mass allocation provides sufficient mass to each system to meet requirements derived from the RFP.

| Spacecraft System | Allocated Mass (kg) |
|---|---|
| Science Payload | 24.5 |
| Structure | 48.0 |
| Thermal | 1.5 |
| Power | 7.7 |
| Communications | 21.1 |
| Command and Data Handling (C+DH) | 15.0 |
| Attitude Determination and Control (ADCS) | 13.3 |
| Onboard Propulsion | 15.0 |
| Margin (%) | 43.8 (30%) |
| **Dry Mass** | **189.8** |
| Propellants | |
| MMH | 99.224 |
| N2 | 9.71 |
| NTO | 60.14 |
| Hydrazine | 6.0 |
| Total Propellant Mass | 177.0 |
| **Wet Mass** | **367.0** |

**Table III.4** Spacecraft design includes margin to allow for system mass increase throughout development process while still meeting mass requirements below.

| Req. # | Requirement Text | Compliance |
|---|---|---|
| 1.1 | The total mass of the spacecraft shall not exceed 500 kg. | Total Mass = 367.0 kg (Table III.3) |
| 1.1.1 | The mass of the science payload shall not exceed 40 kg. | Payload Mass = 24.5 kg (Table III.3 |
| 1.1.2 | The mass of the spacecraft structure shall not exceed 55 kg. | Structure Mass = 48.0 kg (Table III.3) |
| 1.1.3 | The mass of the thermal control system shall not exceed 15 kg. | Thermal Mass = 1.5 kg (Table III.3) |
| 1.1.4 | The mass of the electric power system shall not exceed 15 kg. | Power Mass = 7.7 kg (Table III.3) |
| 1.1.5 | The mass of the communications system shall not exceed 25 kg. | Comms. Mass = 21.1 kg (Table III.3) |
| 1.1.6 | The mass of the C+DH system shall not exceed 35 kg. | C+DH Mass = 15.0 kg (Table III.3) |
| 1.1.7 | The mass of the ADCS shall not exceed 30 kg. | ADCS Mass = 17.0 kg (Table III.3) |
| 1.1.8 | The mass of the propulsion system shall not exceed 35 kg. | Propulsion Mass = 15.0 kg (Table III.3) |
| 1.1.9 | The mass of the spacecraft propellant shall not exceed 250 kg. | Propellant Mass = 177.0 kg (Table III.3) |

### III.C Mission Design and Trajectory

## Launch Provider

In order to keep the cost of this mission within requirements set by the RFP, a cost effective launch provider was required. Launch service providers initially considered for TRIDENT are shown in Table III.5 below.

**Table III.5.** Possible launch providers valued against launch services costs

| Company | Launch Vehicle | Cost (U.S Dollars F.Y 2015) x1 million |
|---|---|---|
| Orbital ATK [10] | Minotaur I | 28.8 |
| Space-X [11] | Falcon 9 | 61.2 |

The choice for the launch provider for TRIDENT is Orbital ATK. The spacecraft will be the primary payload on a Minotaur I rocket capable of launching up to 584 kg of payload into low-Earth orbit (LEO) at an altitude of 400 km and an inclination of 28.5°. Given the low price and reliability of the launch services from Orbital ATK, they were selected as the launch provider for TRIDENT. Other launch services were beyond the range of $100 million U.S dollars and were therefore not considered.

### Launch Vehicle Overview

The Minotaur I is a 4-stage rocket that uses solid propellant as fuel. The rocket is derived from a modified Minuteman 2 rocket but implements modern avionics and is designed for various payload sizes and launch locations [10]. The launch vehicle configuration is shown in Figure III-2. This vehicle is a flight proven and high heritage design, drawing from Minuteman and Orbital ATK success. Additionally, Orbital ATK has added advanced composite structures and was designed to simplify vehicle complexity and increase safety and reliability [10].

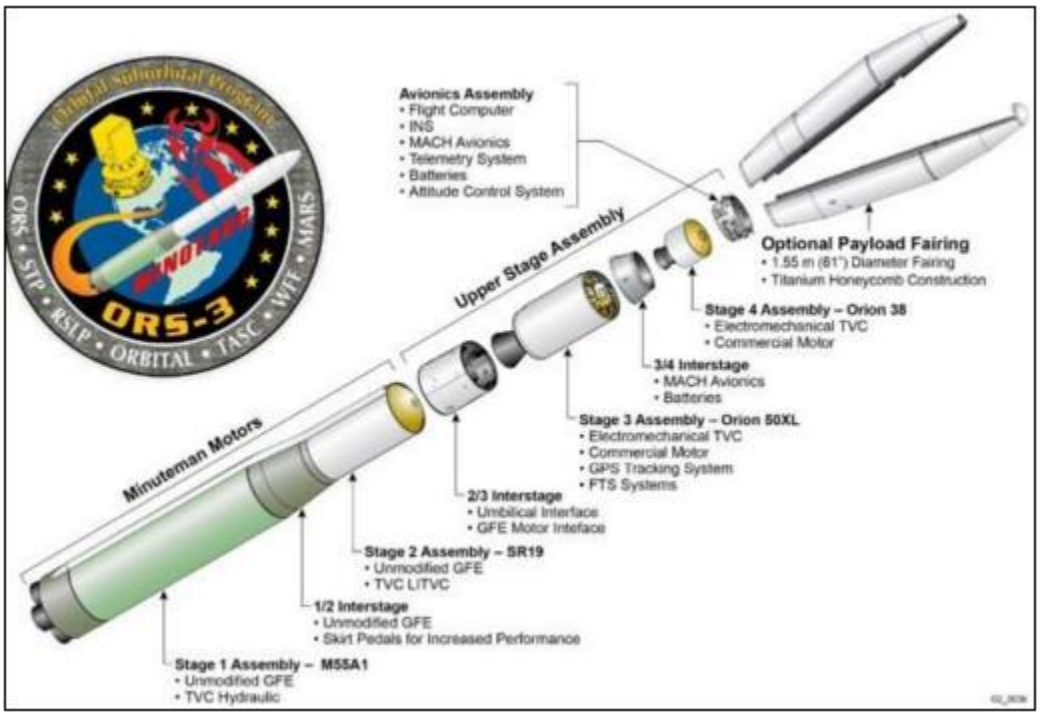


**Figure III-2.** Minotaur I Rocket based on flight qualified Minuteman missile technology will deploy the spacecraft to Earth orbit **[12]**.

The spacecraft is designed to fit inside the payload fairing of the Minotaur I, and has a total mass that is well below the max capability of the Minotaur I to deploy into orbit. Due to the proven history of the Minotaur [12], the low cost, and the ability to deploy the spacecraft into high orbits, it is the ideal launch vehicle for the TRIDENT mission design.

**Trajectory**

The goal in trajectory design is to find the trajectory that requires the least amount of ΔV to get from Earth to the given destination. Due to the direct relationship between ΔV and propellant mass, finding the minimum ΔV trajectory reduces the propellant mass to a minimum value. This has the overall effect of reducing the size of the propulsion system, further reducing the cost of the entire spacecraft in terms of both mass and money. One of the requirements given by the RFP is to keep the cost of the mission under $100 million, so reducing the cost of the system is the main priority.

The trajectory design for this mission was done using a combination of a Lambert's problem analysis and patched conics [13]. The patched conic method accounts for the fact that gravitational bodies

are not point masses, as assumed in Newtonian gravitation. This means that any mass will have a "sphere of influence" where its gravitational pull is great enough for objects to orbit without escaping this "sphere." Lambert's problem can be used to find the minimum launch characteristic energy (C3) value at Earth or the minimum excess velocity between the transfer trajectory between Earth and EV5.The main result of Lambert's problem states that the time required to traverse an elliptical arc between specified endpoints only depends on the semi-major axis, chord length between the two points, and sum of the radii of the specified orbit positions [13].

The problem can be solved for different times of flight as well as semi-major axis and these can be varied over different launch dates and arrival dates. In order to find the minimum C3 values, an iterative program was written to solve for multiple transfer times to obtain the minimum C3 value and produce a "pork-chop" plot. This type of plot can be designed to show the variation of time of flight for different values of semi-major axis, or for the purposes of this analysis, to show the C3 contour as the departure and arrival date are varied. For the purpose of interplanetary trajectory design, C3 is the value that is minimized instead of the excess velocity. Since the orbits of Earth and EV5 are similar, it means that very low C3 values can be found. The C3 value as well as the excess velocity between the transfer orbit and EV5 are then used to calculate the ΔV values. These values are shown in Table III.6 below.

**Table III.6.** ΔV Budget Reduces Propellant and Mass Requirements

| **Burn segment** | **ΔV (km/s)** |
|---|---|
| First burn at Earth | 2.13 |
| Second Burn at EV5 | 4.17 |
| Plane Change Maneuver | 0.1 |
| Total ΔV | 6.4 |

During the design process, orbiting the asteroid was initially considered. However, the fuel costs associated with orbiting a low gravity body were too high compared to "inertially hovering" the asteroid. Inertial hovering allows for significant portions of the asteroid to be imaged without costly and unnecessary maneuvers. Details of how inertial hovering still provides comparable coverage to orbiting are given in Section II.

The trajectory consists of four different phases. The first part is launch, which will take place at Cape Canaveral on August 2, 2019. The spacecraft will be aboard the Minotaur I and launched into orbit around Earth to an altitude of 400 km. Once the spacecraft is deployed from the Minotaur, the mission sequence will begin, and the spacecraft will fire the primary thruster to perform the first ΔV maneuver. The spacecraft will then be on an elliptical trajectory where the main body of gravitational influence is the Sun. Another burn will be performed at EV5 to decrease its velocity relative to the asteroid. The spacecraft will be in an inertial hovering state [14] above the asteroid, and one last ΔV burn will be used to change the inclination of the spacecraft so that the asteroid can be imaged. Figure III-3 below shows the trajectory that the spacecraft will take to get from Earth to EV5.

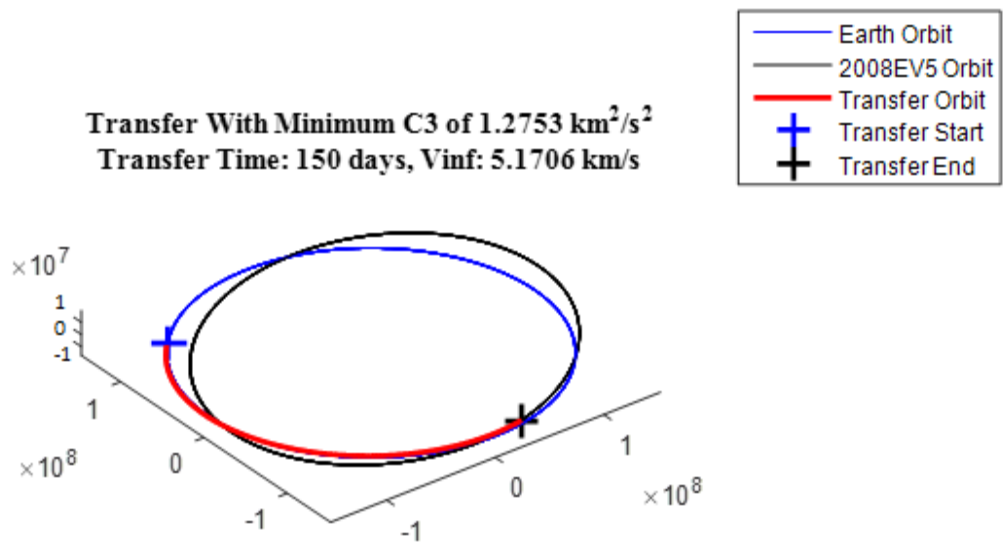


**Figure III-3.** Transfer trajectory of the spacecraft from Earth to EV5.

The total transfer time from Earth to EV5 is 150 days for this trajectory, which means that the spacecraft will arrive at the asteroid on December 30, 2019 where the science phase of the mission will begin. A "pork-chop" plot was generated to show the variation in launch C3 against varying launch and arrival dates. Figure III-4 below shows that for times of flight greater than 150 days, the C3 value is much greater than the value for a departure date of August 2, 2019. As the arrival date at EV5 increases past the nominal arrival date 150 days after launch, the C3 value reaches a high point, and then decreases again. This shows that launching on August 2, 2019 will have a lower C3 value compared to leaving at a later

date, but it also shows there is opportunity to launch again at a later date if there are launch delays due to weather.

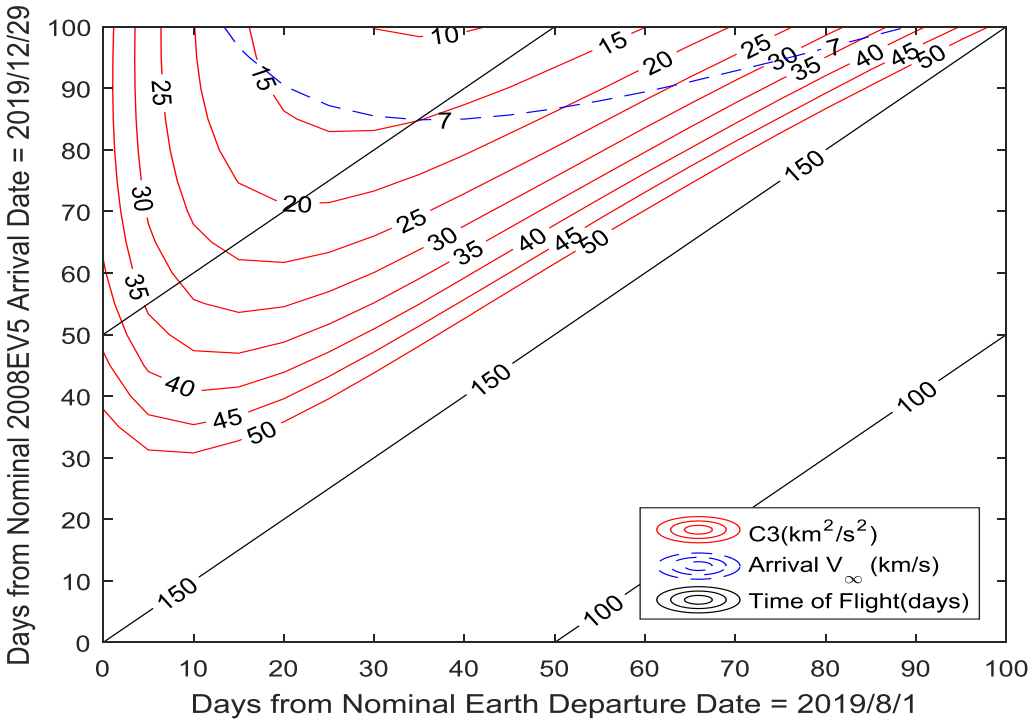


**Figure III-4.** Pork chop plot shows how C3 varies over the launch and arrival dates

In order to meet the demands of the mission trajectory, a launch vehicle is required to insert the spacecraft into orbit around the Earth. The requirement in Table III.7 was derived from the RFP to ensure that the TRIDENT spacecraft will be successfully inserted into orbit, and the table references how the requirement is met.

**Table III.7.** TRIDENT launch vehicle requirements established to deposit spacecraft in orbit while meeting cost requirement of $100 M US dollars.

| Req. # | Req. Text | Compliance |
|---|---|---|
| 1.2 | The launch vehicle shall provide spacecraft deployment into orbit around the Earth for a spacecraft with a mass of 500 kg. | Section III.C.2 summarizes the capability of the Minotaur, and can carry a payload of up to 584 kg |

### III.D Propulsion System

## System Selection

The main functions of the propulsion system for this mission are to get the spacecraft from orbit around Earth to EV5, and perform the required plane change during the science portion of the mission. The design of the propulsion system relies directly on the trajectory design. Since the trajectory was designed to reduce the ΔV necessary for orbital transfer, the mass and monetary cost of the propulsion system is minimized.

Once the ΔV was calculated, the propellant mass was plotted as a function of specific impulse ($I_{sp}$) to find the range of $I_{sp}$ that gives the lowest amount of required propellant mass. This can be seen in Figure III-5 below. For the total ΔV of 6.3 km/s the propellant mass falls between 150 kg and 200 kg. The $I_{sp}$ drops off very quickly around 300 seconds so an engine with the capability of providing 300 seconds or greater of impulse would reduce the propellant mass required.

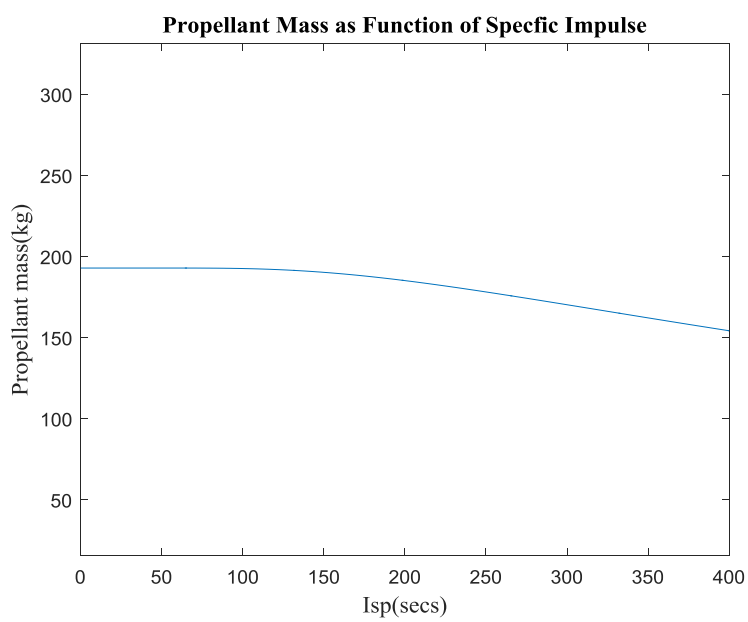


**Figure III-5.** $I_{sp}$ dependencies cause propellant mass to quickly decrease at $I_{sp}$ values greater than 300 s.

As Table III.8 shows, a monopropellant system does not fall within the required range of $I_{sp}$'s greater than 300 s. This narrows the choice down to two possibilities: a bipropellant system and a

hybrid propellant system. However, due to the limited heritage [15] of hybrid propulsion systems, a bi-propellant system was deemed preferable in order to reduce mission risk via a high heritage system.

**Table III.8.** TRIDENT uses bipropellant engines holding high space flight heritage and meets $I_{sp}$ requirements **[16]**

| Type | $I_{sp}$ capability (s) | Heritage |
|---|---|---|
| Monopropellant | 200-235 | High |
| Bipropellant | 274-467 | High |
| Hybrid (Solid/liquid) | ~330 | Limited |

## Thruster Design

Several possible thruster types have the ability to give the performance required from the trajectory design. A list of the thruster models that were considered viable candidates are given in Table III.9 below. The design of the propulsion system is highly dependent on the ΔV requirements of the trajectory.

**Table III.9.** S400-12 was chosen based on its specific impulse and high heritage **[16] [17] [18]**

| Engine Model | Manufacturer | Nominal Thrust (kN) | Specific Impulse (s) | Propellant Mass | Heritage |
|---|---|---|---|---|---|
| S400-12 | EADS Astrium | 0.425 | 321 | 169.07 | >60 missions |
| HiPAT | Aerojet Rocketdyne | 0.445 | 320-323 | 168.75 | Flight proven |
| R-4D | Aerojet Rocketdyne | 0.49 | 300-315.5 | 169.95 | Flight proven |
| R-42 | Aerojet Rocketdyne | 0.89 | 303 | 171.96 | Flight proven |
| R-42DM | Aerojet Rocketdyne | 0.89 | 327 | 168.1 | TRL 6 |
| AMBR | Aerojet Rocketdyne | 0.623 | 333 | 167.13 | TRL 6 |
| TR-312-100MN | Northrop Grumman | 0.503 | 325 | 168.42 | 2 engines in pre-qualification |
| TR-308 | Northrop Grumman | 0.472 | 322 | 168.9 | Chandra X-ray Observatory |
| TR-312-100YN | Northrop Grumman | 0.556 | 330 | 166.15 | 2 engines in pre-qualification |

One can see from Table III.9 that each candidate meets a specific impulse value greater than 300 seconds. In order to further narrow down the choice of the propulsion system, the propellant mass required for each thruster was calculated and heritage was taken into account to come to the final choice for the propulsion system. Table III.9 incorporates these parameters as well. The total propellant mass value includes fuel, oxidizer, and pressurant mass. The pressurant mass was added to the total propellant mass after the required oxidizer and fuel values were determined based on the ΔV required. Using these

parameters, the S400-12, manufactured by EADS Astrium, is selected as the propulsion system for the spacecraft.

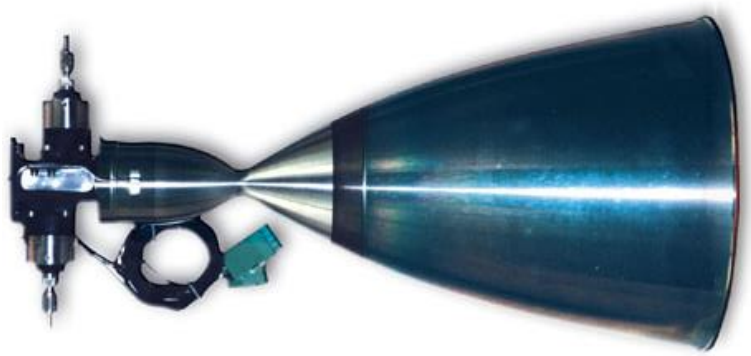

**Figure III-6.** S400-12 thruster capable of completing the mission successfully

A picture of the actual engine is shown in Figure III-6 above. The performance specifications of the S400-12 engine are shown in Table III.10 below. Based on the trajectory analysis, this model is able to provide enough specific impulse and hence the proper amount of thrust to complete the transfer trajectory and complete the required plane change maneuver.

**Table III.10.** Rocket performance characteristics that enable the required transfer trajectory and plane change maneuvers.

| S400-12 Rocket Performance Characteristics | |
|---|---|
| Nominal Thrust (N) | 420 |
| Thrust Range (N) | 340-440 |
| Nominal Specific Impulse (s) | 321 |
| Nominal Fuel-to-Oxidizer Ratio | 1.65 |
| Nominal Combustion Chamber Pressure (bar) | 10 |
| Throat diameter (inner) (mm) | 16.4 |
| Nozzle end Diameter (mm) | 244 |
| Fuel | MMH (Monomethylhydrazine) |
| Oxidizer | NTO (Dinitrogen tetroxide) |
| Mass (kg) | 4.3 |

## Fuel, Oxidizer, and Pressurant Tanks

Since the engine is a bipropellant system, it requires three different tanks to store fuel, oxidizer, and a pressurant to keep the fuel and oxidizer at a constant pressure. The RFP emphasized the use of flight proven technology with high heritage, so it was not necessary to completely redesign a new engine model

for this mission. Therefore, the oxidizer and fuel, MMH and NTO, are used because the S400-12 was designed to operate using this fuel and oxidizer.

**Table III.11. Fuel Tank**

| Fuel Tank Parameters | |
|---|---|
| Diameter (m) | 0.600 |
| Tank Volume ($m^3$) | 0.113 |
| Fuel Mass (kg) | 99.224 |
| Tank Material | COPV |

The material for all the tanks will be a Composite Overwrapped Pressure Vessel (COPV). Most spacecraft tanks are made of this material, which means the cost will be low. They are spherically shaped in order to maximize the amount of volume that the gas can occupy inside and the pressure is evenly distributed around the vessel which reduces risk of explosion or rupture of the tank.

**Table III.12. Oxidizer Tank**

| Oxidizer Tank Parameters | |
|---|---|
| Diameter | 0.532 |
| Tank Volume ($m^3$) | 0.079 |
| Oxidizer Mass (kg) | 60.14 |
| Tank Material | COPV |

Typically, most spacecraft use either helium or nitrogen as the pressurant gas [16]. The total volume of the pressurant depends on the density of the pressurant gas at the maximum beginning-of-life operating temperature and pressure. (These are 313 K and 27.6 MPa respectively.) The density of nitrogen gas is much higher than helium at this temperature and pressure so that means the tank volume will be lower. Therefore, the spacecraft fuel and oxidizer tanks will be pressurized by nitrogen gas. Decreasing the volume of the tanks reduces the mass, which helps to reduce the overall cost of the mission. Table III.13 below shows the specifications of the pressurant tank.

**Table III.13.** Low volume pressurant tanks reduce material cost.

| Pressurant Tank Parameters | |
|---|---|
| Diameter (m) | 0.484 |
| Tank Volume ($m^3$) | 0.059 |
| Pressurant Mass (kg) | 9.71 |
| Tank Material | COPV |

For the TRIDENT mission concept to succeed, the spacecraft must transport the science payload to the vicinity of the asteroid for data collection. The following requirements are derived to ensure that the spacecraft will reach the asteroid to conduct the science mission while still meeting budgetary constraints. Table III.14 below lists said requirements and how they are met through the TRIDENT mission design.

**Table III.14.** TRIDENT propulsion requirements established to meet requirements pertaining to spacecraft location for science data collection.

| Req. # | Req. Text | Compliance |
|---|---|---|
| 1.1.8 | The mass of the propulsion system shall not exceed 35 kg. | Table III.15 shows that total mass of the engine is 4.3 Kg |
| 1.1.9 | The mass of the spacecraft propellant shall not exceed 250 kg. | Table III.16 shows that the total propellant mass is 177.0 Kg |
| 1.3.1 | The spacecraft shall provide onboard propulsion systems to maneuver the science payload to an altitude of 300 +/- 10 m from the asteroid and remain within said altitude range. | Section III.D summarizes the propulsion system which takes the spacecraft to EV5 |
| 1.3.1.1 | The spacecraft shall provide a minimum ΔV capability of 6.4 km/s | Table III.17 shows that the ΔV capability is 6.4 km/s |
| 1.3.1.2 | The spacecraft shall transport the science payload to the asteroid in a maximum time frame of 11 months. | Section III.C.3 states that the total transfer time is 150 days |

## III.E Attitude Determination and Control System

The TRIDENT spacecraft will be stabilized by a three-axis control system that provides stability from the disturbances it will experience throughout the mission. The three-axis stabilization technique is preferred to conventional spin stabilization due to TRIDENT's use of solar arrays to generate power and the need to communicate with the Earth during a majority of the mission. Solar arrays would not be able to generate power effectively if the spacecraft were stabilized using the spin-stabilization technique. Another advantage of three-axis control is its ability to provide faster maneuverability compared to other stabilization methods. In order to reduce risks and costs, the TRIDENT mission will employ spaceflight proven attitude determination sensors and control actuators.

### Disturbances and Pointing Requirements

At EV5, due to very low gravitational effects from the asteroid, the major sources of disturbance will be non-gravitational forces from solar radiation pressure and pressure exerted by re-emitted infrared radiation from the spacecraft and the asteroid. Additionally, coasting in a low-gravity area will require small

ΔV burns for maneuvering. These relatively small magnitude burns may accumulate to larger errors than the errors generated from large ΔV burns [19]. A stable, space flight proven attitude control system on board the spacecraft will correct and compensate for these disturbances and errors.

Appropriate pointing accuracies will be required for proper functioning of other systems onboard the spacecraft. Because the TRIDENT spacecraft will not be in eclipse for the majority of the mission and the fact that appropriate thermal protection will be employed to protect the instruments from strenuous temperatures, no major pointing accuracies are derived from the Thermal Protection System. The mission trajectory and the configuration of solar arrays on the spacecraft allows it to be in constant exposure of the Sun for the entirety of the mission, thus imposing a minimal pointing requirement. Science instruments, particularly, the deployment of penetrators will drive the pointing requirements for the mission as shown in Table III.18.

**Table III.18.** The penetrators will drive the pointing requirements for the TRIDENT mission.

| Requirement Generator | Pointing Accuracy required (deg) |
|---|---|
| Communication Antennas | 1.00 |
| Penetrators | 0.05 |
| Thermal Infrared Spectrometer | 1.00 |
| High Resolution Camera | 0.50 |
| Solar Arrays | 8.00 |

## Attitude Determination Sensors

The TRIDENT spacecraft's position and orientation will need to be accurately identified during the entirety of the mission. In order to choose appropriate sensors for the TRIDENT mission, several candidate sensors were compared (Table III.19) The chosen attitude sensors package includes two star trackers, one inertial measurement unit and as a back-up sensor, the science High Resolution Camera (HRC) will be used.

**Table III.19.** Chosen attitude sensors will meet the pointing requirements **[16]**

| Sensor | Mass (kg) | Power (W) | Accuracy |
|---|---|---|---|
| Star Tracker | 2-5 | 5-20 | 0.003-0.01 deg |
| Inertial Measurement Unit | 0.1-15 | 1-200 | 0.003-1 deg/hr |
| Sun sensor | 0.1-2 | 0-3 | 0.005-3 deg |
| Magnetometer | 0.3-1.2 | <1 | 0.5-3 deg |
| Horizon Sensor | 1-4 | 5-10 | 0.1-0.25 deg |

Star trackers meet the pointing requirements set forth in Table III.18 while magnetometers and horizon sensors fail to do so. Additionally, horizon sensors are not as effective outside of LEO. Sun sensors would have been considered as a back-up attitude sensor but the HRC will be able to perform similar tasks as a sun sensor. Therefore, to avoid redundancy in mass and power, the HRC will be used as a back-up attitude sensor. An inertial measurement unit (IMU) will be required to measure the rate of the angular rotation induced by the reaction forces generated upon deploying the penetrators.

### Attitude Control Actuators

The TRIDENT spacecraft will control its attitude to account for the disturbances mentioned in Section III.E. The actuators considered and their performance is outlined in

Table III.20. The TRIDENT mission will use three reaction wheels and twelve hydrazine thrusters as main control actuators for the mission. For the majority of the mission, the spacecraft will be at a significant distance from the Earth where magnetic torquers will not be able to function. Additionally, control moment gyroscopes (CMGs) will constitute for high cost, mass, power and complexity and therefore, not included in the control actuator package. Reaction wheels on the other hand, provide smooth changes in torque, allowing accurate fine pointing of the spacecraft [16]. Hydrazine thrusters will be necessary to stabilize the spacecraft from the disturbances caused by the deployment of penetrators at an exit velocity of 45 m/s.

**Table III.20.** Actuators **[16]**

| Actuator | Mass (kg) | Power (W) | Performance |
|---|---|---|---|
| Reaction Wheels | 2-20 | 10-100 | Max Torque: 0.01 – 1 N·m |
| Hydrazine Thrusters | Varies by Performance | Varies by performance | 0.5 – 9000 N |
| Magnetic Torquers | 0.4-50 | 0.4-50 | 1 – 4000 A·m$^2$ |
| Control Moment Gyroscope | >10 | >10 | Max torques: 25 – 5000 N·m |

### Component Selection

The ADCS sensors and components were chosen based on their mass, performance and power consumption as shown in Table III.21 to Table III.25. One important set of components worth discussing are the thrusters. We employ two different type of attitude control thrusters to meet the constraints set by the Power Subsystem. As it can be seen from Table III.22 and Table III.23, power consumption of both

set of thrusters outweigh power consumption from any other control actuator. Additionally, the difference in power consumption between a 20 N thruster and a 1 N thruster is approximately 17.4 W. Therefore, we employ two different types of thrusters to ease power consumption. It must also be noted that major events that involve extensive use of attitude control thrusters is after deployments of penetrators and the analysis that is presented in Section III.E approves the ability to use two different types of thrusters to achieve attitude control tasks.

The costs of all of the below mentioned components were also identified to meet the cost requirements imposed by the RFP. However, the costs figures are not included in this section. Instead, they were used in Section III.O, Cost and Cost Estimating Methodology.

**Table III.21.** Reaction Wheels **[20] [21] [22]**

| **Model and Manufacturer** | **Mass per wheel (kg)** | **Angular momentum at nominal speed** | **Reaction torque at nominal speed** | **Power consumption (W)** |
|---|---|---|---|---|
| RSI 01-5/15 Rockwell Collins | 0.6 | 0.12 Nms +/-2800 rpm | 0.005 Nm @ +/- 2800 rpm | <4 |
| 10 SP-M Surrey Space | 0.96 | 0.42 @ 3000 rpm | 0.011 Nm @ 3000 rpm | 3 |
| Microwheel 200 MSCI | 0.94 | 0.18 Nms @ +/- 10000 rpm | 0.03 Nm @ 10000 rpm | <7 |

**Table III.22.** 1N Thrusters **[23] [24] [25]**

| Model/ Manufacturer | Mass per thruster (kg) | Nominal Thrust (N) | $I_{sp}$ (s) | Power consumption (W) |
|---|---|---|---|---|
| MR 103M Aerojet | 0.16 | 0.28-0.99 | 206-221 | 7.1 |
| MONARC-1 Moog | 0.38 | 1 | 227.5 | 18 |
| MRE-0.1 Northrop | 0.5-0.9 | 1 | 216 | 15 |

**Table III.23.** 20N Thrusters **[23] [24] [26]**

| Model/ Manufacturer | Mass per thruster (kg) | Nominal Thrust (N) | $I_{sp}$ (s) | Power consumption (W) |
|---|---|---|---|---|
| 20 N Chem Prop Airbus | 0.65 | 7.9-24.6 | 222-230 | 27 |
| MR-106L Aerojet | 0.59 | 10-34 | 229-235 | 24.5 |
| MONARC-22-12 Moog | 0.69 | 22 | 228.1 | 30 |

**Table III.24.** Star Trackers **[27] [28] [29]**

| **Model / Manufacturer** | **Mass (kg)** | **Operating temperature range (℃)** | **Power (W)** | **Accuracy (deg)** |
|---|---|---|---|---|
| ST-16 Sinclair Aerospace | 0.12 | -40 to 50 | 1 max | 0.166-1.23 |
| Extended NST Blue Canyon Tech | 1.3 | LEO temperature range – Life 3 years | 1 max | ~ 0.00016 |
| $\mu$STAR-200M | 2.1 | -24 to 64 | 8-10 | 0.002 – 0.005 |

**Table III.25.** Inertial Measurement Units **[30] [31] [32]**

| Model / Manufacturer | Mass (kg) | Operating temperature range (℃) | Power (W) | Bias stability (deg/hr) |
|---|---|---|---|---|
| LN 200S Northrop Grumman | 0.748 | -54 to 71 | 12 | <0.1 |
| ASTRIX 1000 series AIRBUS | 4.5 | -25 to 60 | 13.5 | 0.1 |
| MASIMU03 Micro Aerospace Solutions | 0.15 | 0 to 70 | 1.2 | 0.78 |

## Recovering from disturbances caused by penetrator deployment

As mentioned in the Section II, Phase 4 of the science mission will include deploying penetrators from the spacecraft at an altitude of 300 m from the asteroid. The deployment mechanisms will impart a velocity of 45 m/sec on each of the 3 kg penetrators. A significant amount of reaction force and torque is expected to be imparted on the spacecraft resulting from penetrator deployment.

The reaction control system comprising of 20 N and 1 N thrusters will stabilize the spacecraft from the disturbances caused by these reaction forces. The analysis contains two cases: 1) mitigation of reaction force generated by the penetrator in the middle and 2) mitigation of reaction forces and torque generated by penetrators on either sides.

Case 1: The middle penetrator will be placed on the spacecraft so that it aligns with the center of mass axis. Therefore, the reaction force imparted by the deployment of this penetrator will be purely linear. Based on conservation of linear momentum, this pure linear force adds up to approximately 900 N. To recover from this disturbance, the spacecraft will fire its one 20 N thruster and two 2 N thrusters for approximately 6.13 seconds. This scenario is visualized in Figure III-7.

Case 2: Penetrators on the either side are 0.1 m away from the center of mass axis. Therefore, upon deployment of either of these penetrators, the reaction will comprise of linear force as well as torque. Based, on conservation of linear and angular momentum, the linear reaction force will still amount to 900 N, while the reaction torque will add up to 90 N·m. To recover from these combined disturbances, the spacecraft will fire two 1 N thrusters in addition to a 20 N thruster and two 1 N thruster in the back of the spacecraft. The approximate stabilization time is 6.75 seconds. This scenario is shown in Figure III.8.

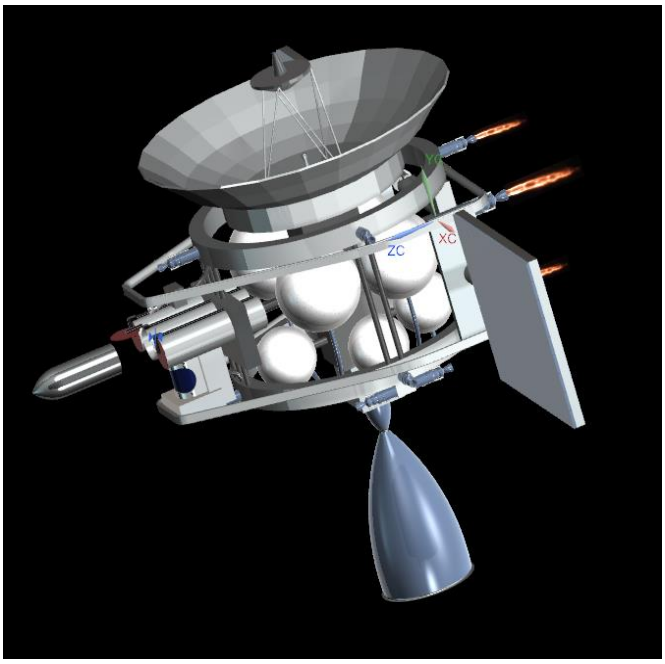


**Figure III-7**. Middle penetrator deployment

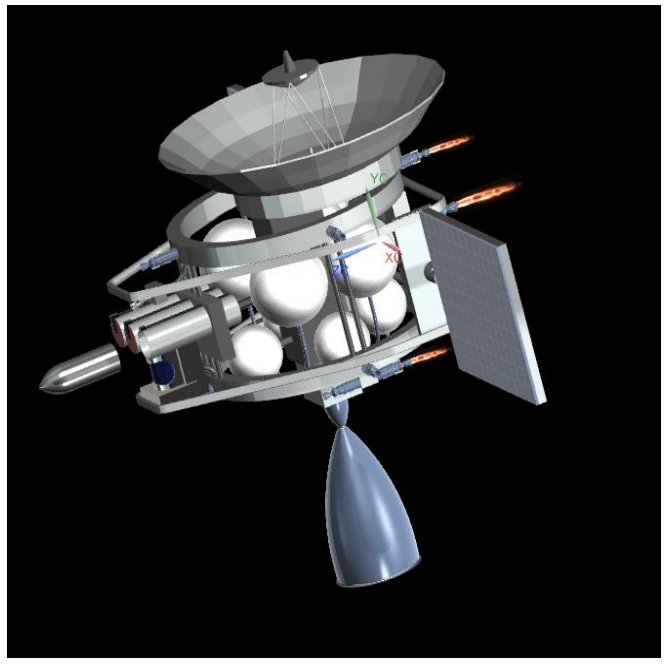


**Figure III-8.** Off-axis penetrator deployment

**Table III.26.** RCS thrusters effectively mitigate the forces and torques generated by penetrator deployment.

| **Penetrator deployed** | Middle | **Penetrator deployed** | Off Axis |
|---|---|---|---|
| **Reaction Force (N)** | 900 | **Reaction Force (N)** | 900 |
| **Reaction Torque (N·m)** | 0 | **Reaction Torque (N·m)** | 90 |
| **Thrusters fired** | One 20 N and two 1 N | **Thrusters fired** | One 20 N and four 1 N |
| **Time to stabilize (sec)** | 6.13 | **Time to stabilize (sec)** | 6.75 |

The spacecraft, in order to function as designed, must be oriented in specific directions throughout the duration of the mission. These mission requirements and how they are met in the design of the ADCS are highlighted in Table III.27 below.

**Table III.27.** TRIDENT ADCS requirements established to meet pointing requirements of onboard systems.

| Req. # | Req. Text | Compliance |
|---|---|---|
| 1.1.7 | The mass of the attitude determination and control system shall not exceed 30 kg. | ACDS mass is 13.3 kg which is well below the requirement constraint. |
| 1.4 | The spacecraft shall maintain payload operating conditions for a minimum of 1 year after launch. | Due to reliability and durability of chosen sensors and actuators, payload pointing requirements will be met for a long time. |
| 1.4.1 | The spacecraft shall provide attitude determination and control of the science payload for a minimum of 1 year after launch | The RCS fuel capacity holds sufficient margin, the ADCS sensors and actuators are designed to function for at least 3 years. |
| 1.4.1.1 | The spacecraft shall provide a minimum pointing accuracy of 0.05 degrees | The combinations of spaceflight proven sensors and actuators will meet this requirement. |
| 1.4.1.2 | The spacecraft shall provide a minimum $\Delta V$ of 50 m/s for attitude control | The combination of 20 N and 1 N thrusters meet this requirement. |
| 1.4.1.3 | The spacecraft shall provide 3-axis stability for a minimum of 1 year after launch. | The chosen sensors and actuators will stabilize the spacecraft using 3-axis stabilization method. |

## III.F Power System

### Power Requirements and Modes

TRIDENT will be utilizing solar cells as the means of power generation and will rely on primary batteries for power during the launch phase to power all of its systems during the mission. The following power required for each system when they are operating is shown below.

**Table III.28.** Power requirement for each system for active and idle states.

| System | Power (W) | Idle Power (W) |
|---|---|---|
| Propulsion System (Main Engine) | 46 | 0 |
| Thermal System | 0 | 0 |
| Power System (Electric Power System (EPS) + Batteries) | 2 | 0 |
| **ADCS** | | |
| Inertial Measurement Unit | 12 | 0 |
| Star Tracker | 1 | 0 |
| RCS Thruster | 24.5 | 0 |
| Reaction Wheels | 3 | 0 |
| **Science Instruments** | | |
| HRC | 2.5 | 1.75 |
| Thermal Infrared Spectrometer | 7.2 | 4.5 |
| Digital Video Recorder (DVR) | 5.7 | 4.2 |
| Penetrometer Deploying Mechanism | 2 | 0 |
| **Telemetry Tracking and Command** | | |
| Communication (Antenna + Transponder + Amplifier) | 60 | 2 |
| C&DH | 12 | 0 |

There will be 4 major power modes for the spacecraft; Standby, Propulsive Maneuver, Science, and Emergency Mode. The power requirement for each mode is shown in the table below. When the subsystem is not operating, it will show 0 W.

**Table III.29.** Power budget for each power mode with propulsive maneuver having the highest power requirement.

| | **Propulsive Maneuver** | | **Standby** | | **Science** | | **Emergency** | |
|---|---|---|---|---|---|---|---|---|
| **System** | **Power (W)** | **Idle Power (W)** | **Power (W)** | **Idle Power (W)** | **Power (W)** | **Idle Power (W)** | **Power (W)** | **Idle Power (W)** |
| Propulsion System (Main Engine) | 46 | | 0 | 0 | 0 | 0 | 0 | 0 |
| Thermal System | 0 | | 0 | 0 | 0 | 0 | 0 | 0 |
| Power System (EPS + Batteries) | 2 | | 2 | 0 | 2 | 0 | 2 | 0 |
| **ACDS** | | | | | | | | |
| Inertial Measurement Unit | 12 | | 0 | 0 | 12 | 0 | 12 | 0 |
| Star Tracker | 1 | | 0 | 0 | 1 | 0 | 1 | 0 |
| RCS Thruster X 4 | 24 | | 0 | 0 | 24 | 0 | 0 | 0 |
| Reaction Wheels | 0 | | 0 | 0 | 3 | 0 | 3 | 0 |
| **Science Instruments** | | | | | | | | |
| Camera | 0 | 1.75 | 0 | 1.75 | 2.5 | 0 | 0 | 1.75 |
| Thermal Spectrometer | 0 | 4.5 | 0 | 4.5 | 0 | 4.5 | 0 | 4.5 |
| DVR | 0 | 4.2 | 0 | 4.2 | 5.7 | 0 | 0 | 4.2 |
| Penetrometer Deploying Mechanism | 0 | | 0 | 0 | 2 | 0 | 0 | 0 |
| **Telemetry Tracking and Command** | | | | | | | | |
| Communication (Antenna + Transponder + Amplifier) | 0 | 2 | 0 | 2 | 0 | 0 | 20 | 0 |
| C&DH | 12 | | 12 | 0 | 12 | 0 | 12 | 0 |
| | | | | | | | | |
| Margin = 30% | 29.1 | 3.735 | 4.2 | 3.735 | 19.26 | 1.35 | 15 | 3.135 |
| **Total** | **126.1** | **16.2** | **18.2** | **16.2** | **83.5** | **5.9** | **65** | **13.6** |
| | **142.3** | | **34.4** | | **89.3** | | **78.6** | |

## Power Systems Sizing and Components Selection

For this mission, the onboard spacecraft systems will require varying amounts of power for the duration of the mission. Therefore, it is imperative that reliable power system architecture is selected. In addition, the power system should be relatively light and inexpensive to meet spacecraft cost and mass requirements.

## Power Generation System

Table III.30 shows the comparison between flight validated power generation systems.

**Table III.30.** Solar Photovoltaic key advantages compared to other power systems **[16]**.

| EPS Design Parameters | Solar Photovoltaic | Radioisotope | Nuclear Reactor | Fuel Cell |
|---|---|---|---|---|
| Power Range (kW) | 0.2 – 300 | 0.2 – 10 | 5 – 300 | 0.2 – 50 |
| Specific Power (W/kg) | 25 – 200 | 5 – 20 | 2 – 40 | 275 |
| Degradation Over life | Medium | Low | Low | Low |
| Sensitivity to Eclipse and Sun angling | Medium | None | None | None |
| Fuel Availability | Unlimited | Very Low | Very Low | Medium |
| Cost ($/W) | Low | Medium | High | Medium |
| IR Signature | Low | Medium | High | Medium |

Cost and mass are major constraints for the mission along with developing a reliable power system. Except for solar photovoltaic, all other power sources will be extremely expensive for us to support this mission. As seen in the table above, the solar photovoltaic architectures have a high specific power. Therefore, they are able to provide significant power while having a low mass. They also do not require any fuel compared to other power generation systems and are relatively low cost. The spacecraft will stay within 0.8-1.3 AU from the Sun, so the photovoltaic architecture will be able to generate power efficiently.

NeXt Triple Junction (XTJ) cells from Spectrolab will be used for the solar arrays. XTJ solar cells have the highest efficiency in the space solar cells market, 29.5% [33]. These cells are manufactured from Germanium substrate and weigh 84 mg/cm$^2$. The cells are 5.5 mm thick without the cover glass and 10 mm thick with the cover glass. These solar cells are far more capable than any other solar cells used for a deep space mission. Gallium arsenide is used as the main semiconductor to increase its efficiency compared to silicon structured solar cells. The 5 mm thick cover glass on top of these solar cells will increase their protection from harmful radiation [33]. These cells are the most expensive from all the space cells, however, they fit within our cost budget. These cells have been used for the Iridium NeXT satellite which is due to launch in mid-June 2016, they will also be used aboard the Jupiter Clipper mission which will prove the reliability of these cells.

## Solar Array Sizing

The solar array sizing is based on the maximum power mode, which will be the propulsive maneuver mode as seen in the Table III.29**.** This mode will require 142.3 W of power for the spacecraft to function**.** The solar array is sized based on the critical angle of inclination from the Sun as well. The maximum inclination of the solar panels from the Sun is estimated at 10° for the spacecraft. Other factors such as efficiency of the solar cells and the inefficiencies due to the environment were also considered to size the arrays. Table III.31. shows the properties of the solar cells.

**Table III.31.** Specifications of the XTJ solar cell **[33]**.

| **Solar Cell Properties (BOL)** | **XTJ** |
|---|---|
| Efficiency | 0.295 |
| Array areal power density, $W/m^2$ | 1353 |
| Areal mass $kg/m^2$ | 0.84 |
| Radiation degradation, %/year | 0.5 |
| Temperature degradation, %/year | 85 |
| Worst case incidence angle, degrees | 10 |

Table III.32. shows the calculation for the solar array sizing. The spacecraft will receive 734.4 $W/m^2$ of energy at the asteroid. This value was used to calculate how much power will be generated by one solar cell after the efficiency losses have been accounted for, and then the maximum power requirement was used to calculate the total solar array size required to provide the maximum power to the spacecraft. The incident power from the sun shown in the table below is the power received by the satellite if the solar panels are inclined by 10% to account for margin.

**Table III.32.** Calculation for the solar array to meet the maximum demand.

| Variable | Value |
|---|---|
| Max Power required | 142.3 W |
| Incident Power from the sun | 734.4 W/m$^2$ |
| **Solar Panel Sizing** | |
| Array efficiency, Si (PBOL) | 216.7 W/m$^2$ |
| After Radiation Loss GaAs | 215.6 W/m$^2$ |
| After Temperature loss GaAs | 183.2 W/m$^2$ |
| After Implementation loss | 155.8 W/m$^2$ |
| Array power required (PEOL) | 155.8 W/m$^2$ |
| Solar Array area required | 0.80 m$^2$ |
| Solar Array mass required (6X for panels and deployment system) | 5.3 kg |

## Battery System

Batteries will be required during the launch period when the spacecraft is stored inside the launch vehicle's payload fairing until the deployment of the solar panels. Table III.33 shows comparison between different types of batteries used on spacecraft of similar mission scope.

**Table III.33.** Li-ion batteries provide superior energy density and efficiency **[16]**

| Performance Characteristics for the Batteries | Ni-Cd | Ni-H2 | Li-Ion | System Impact |
|---|---|---|---|---|
| Energy Density (W-hr/kg) | 30 | 60 | 120-130 | Mass savings and vehicle center of gravity |
| Energy Efficiency (%) | 72 | 70 | 98 | Reduction of charge power reduces solar panel mass and size |
| Thermal Power (scale 1-10) | 8 | 10 | 1 | Reduction of radiators, heat pipes sizes |
| Self-Discharge (% per day) | 1 | 10 | 0.3 | Simple management at launch pad & more margin during transfer |
| Temperature Range °C | 0 to 40 | -20 to 30 | 10 to 25 | Management at ambient and thermal control requirement |
| Memory Effect | Yes | Yes | No | No reconditioning management. |

Given their energy density and efficiency, Li+ batteries will be ideal for the TRIDENT mission. Li+ batteries reduces the total dry mass and the need for having more solar cells to charge these batteries when compared to the alternatives. These reductions directly relate to reduced mission cost. Although the table mentions the temperature range for the Li-ion batteries being between 10° and 25°C, recent development in this technology has led to wider operational range for these batteries.

The batteries will be sized based on the power requirement of the spacecraft during the launch phase. The power requirement is shown in Table III.29 as the standby mode, and the spacecraft will need a battery that is able to provide 34.4 W for 30 minutes, for the standby mode when the satellite is stored inside the payload fairing of the launch vehicle until its deployment. Table III.34 shows the battery specifications and sizing. For battery sizing, the required battery capacity was calculated using the power required and the battery specs. 29.2 W-hr was calculated for the required battery capacity. Therefore, a 30W-hr Li-Ion battery will be used to meet the battery requirements.

**Table III.34.** Battery capacity and mass required to support the spacecraft during standby mode

| **Secondary battery properties (BOL)** | **Li-ion** |
|---|---|
| Efficiency, % | 0.98 |
| Energy density at 100% DOD, W-hr/kg | 120 |
| Maxium DOD, % | 60 |
| Power Supply mass per watt, kg/W | 0.2 |
| Eclipse time around the asteroid, hours | 1.2 |
| **Battery Sizing** | |
| Battery Capacity, W-hr | 29.2 |

A 30 W-hr standalone battery will be used for the spacecraft power system as per the requirement. This battery will be able to provide enough power for the standby mode [34]. These batteries will be rechargeable so that the satellite does not have to rely 100% on the solar panels, especially during an emergency mode or if the solar panels fail to function. This will allow the satellite to backup it's data without uninterrupted power supply.

**Power Distribution and Regulation**

The power distribution unit aboard TRIDENT will be supplied by ClydeSpace. This will be a SmallSat power supply unit capable of controlling the power modes for the satellite, as well as being able to supply power to all the components onboard as required by each mode. This power supply unit is capable of handling power of up to 300 W and is compatible with XTJ solar cells and Li-Ion batteries, meeting TRIDENT requirements [35].

**Overview**

Figure III-9 shows the engineering drawing of the solar panel used for this mission. To cover the area required for required power generation, including the battery spacing, the solar array will be 750mm x 560. mm in dimension with a 39.98 mm thickness that includes the cell thickness as well as the panel assembly. These dimensions were chosen based on the maximum solar array area required to support the spacecraft during its maximum power mode. These dimensions were also calculated for the solar array accounts for the individual cell spacing.

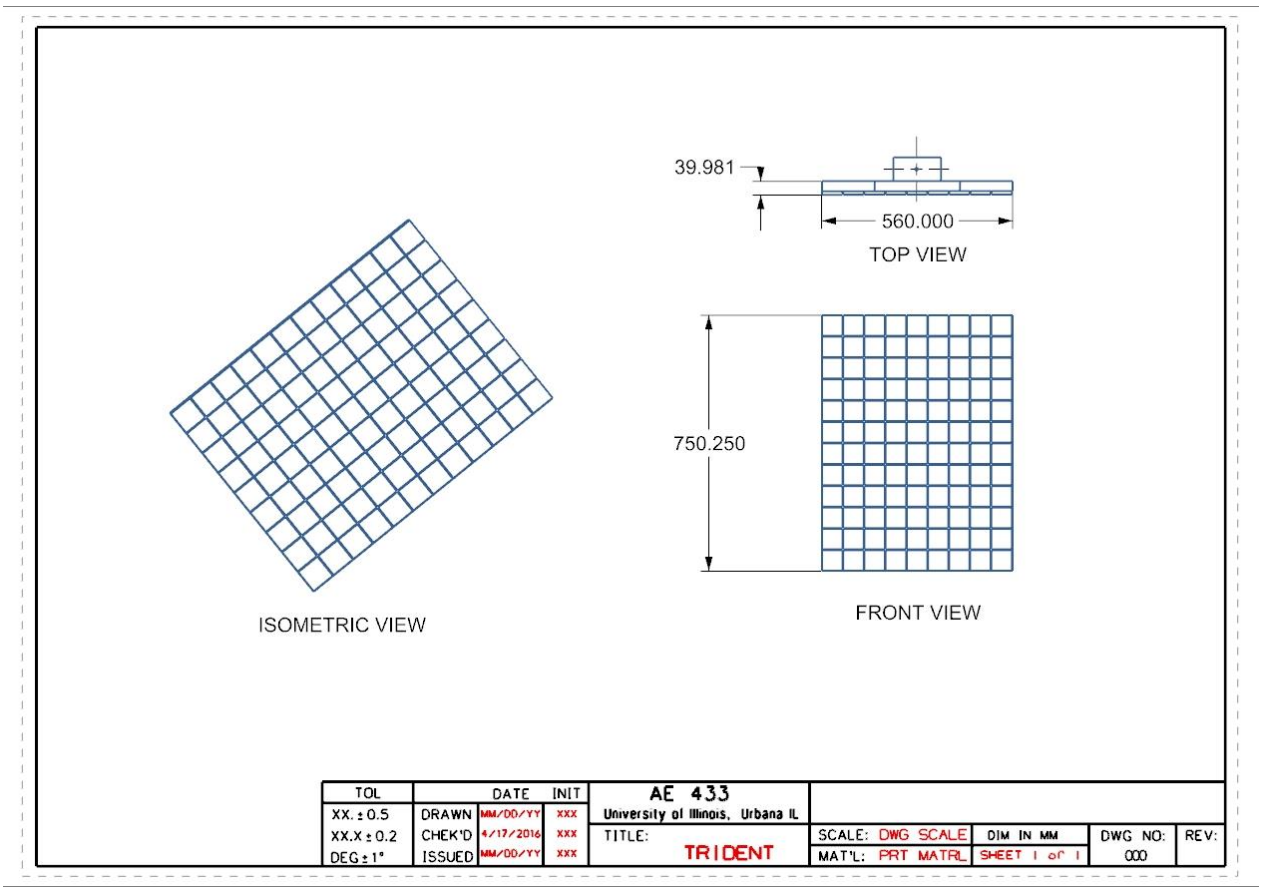


**Figure III-9.** Solar panel dimensions required to meet the maximum power required

The solar panels will be deployable as mentioned in the Spacecraft Configuration section. This will allow for the solar panels to be stowed away during launch for the spacecraft to be able to fit inside the payload fairing of the launch vehicle. The solar panels will also have a gimbaling mechanism to allow the cells to face the sun all the time.

For the science payload and additional spacecraft systems to operate successfully upon reaching the asteroid, power must be continuously supplied to the systems. The requirements and how those requirements are met. Table III.35 details what is needed by the power system and how those requirements are met.

**Table III.35.** TRIDENT requirements established to meet primary power needs of science payload and supporting systems.

| Req. # | Req. Text | Compliance |
|---|---|---|
| 1.4.3 | The spacecraft shall provide power to the science payload for a minimum of 1 year after launch. | Solar cells have low degradation rate, 1.7% over 4000 hours [13], and therefore can provide power for an indefinite time. |
| 1.4.3.1 | The spacecraft shall be capable of providing a maximum power of 142.3 W to the spacecraft systems throughout the duration of the mission. | The solar array will generate 142.3 W of power. Table III.33. |
| 1.4.3.2 | The spacecraft shall provide a minimum of 16.5 W-hr of energy to the spacecraft systems for electronics operation prior to detachment from the launch vehicle. | The battery on-board will provide 30W-hr. Table III.35 |

## III.G Communications System

### Design Overview

The communications system is responsible for handling all data sent and received by the spacecraft including spacecraft bus commands and payload operations. The communication architecture includes a high gain antenna, two medium gain antennas, operation over the X-band space science channel, an X-band solid-state power amplifier from General Dynamics, a solid-state data recorder from SEAKR and Motorola transponders.

Table III.36 contains the mass budget for the communication system. The budget is formulated using the corresponding data in Dawn and NEAR-Shoemaker NASA missions because the communications system architecture uses the two missions as a baseline reference. This increases the reliability and accuracy of the model [34]. Lastly, the Deep Space Network (DSN) will be the ground station due to its 50 years of heritage and reliability in deep space communications [36].

**Table III.36.** Low risk communications components provide continual communication with ground systems

| Component | Mass (kg) |
|---|---|
| High Gain Antenna | 6.5 |
| Medium Gain Antenna (2) | 1.4 |
| Transponders (2) | 8.2 |
| RF Switches, Cables | 3.0 |
| Solid State Amplifier | 1.37 |
| **Total** | **20.47** |

## Communication Requirements

The drivers for the communications system are the science instrument data rates, DSN's specifications, and overall mission operations of the spacecraft. The data rates of the science instruments onboard are given in Table III.37 below. The HRC's data collection rate is orders of magnitude higher than that of the TIS.

**Table III.37.** Data collection rate of science instruments onboard which demonstrates that the HRC's data rate will be a design driver

| Instrument | Data Collection Rate |
|---|---|
| High Resolution Camera | $7.36\times10^{6}$ Bps |
| Thermal Infrared Spectrometer | 5 bps |

DSN's requirement of a link margin of at least 12 dB for downlink operations is a design driver during the development of the link budget [37]. Lastly, to accomplish TRIDENT's goals, the spacecraft will need to complete all phases of its science investigation that range from the downlink of the data acquired from the onboard instruments to the proper deployment of the impactors at the selected locations. The communication time delay and pairing the proper uplink and downlink rates due to such operations are critical design drivers.

## Trade Study Results

The X-band was selected as the choice of radio frequency (RF) because of its reliability and low cost when compared to higher frequencies such as the Ka-band. Furthermore, there is spectral crowding in the heavily used S-band (which is at a lower frequency than X-band) from terrestrial cellular communications that is creating pressure to move all satellite links to higher frequencies [16].

Dawn and NEAR-Shoemaker NASA mission's communication architecture was analyzed and used as a baseline in developing the TRIDENT mission's communication architecture due to their success and

similar mission scope. The redundant Motorola transponders and medium gain antenna used by the NEAR-Shoemaker mission are selected for the TRIDENT mission due to its reliability [38]. The DSN is selected as the ground station because it consists of three deep-space communications facilities placed approximately 120 degrees apart around the world. It enables the establishment of a link with the spacecraft during the required mission phases [34]. Figure III-10 shows the locations of the DSN facilities.

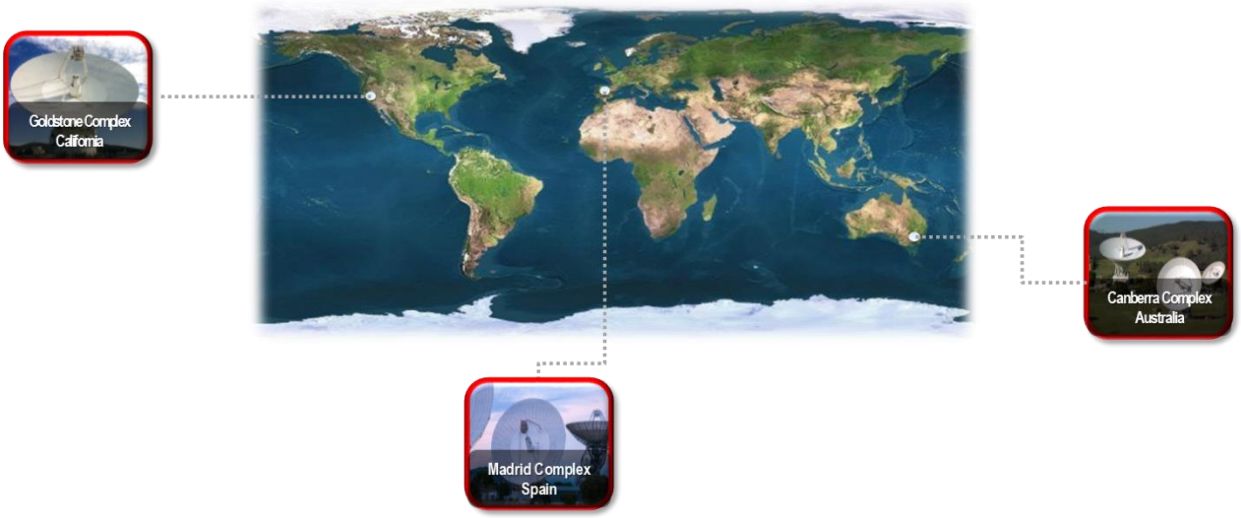


**Figure III-10.** Map of Deep Space Network Sites that are 120 degrees apart enables link to the DSN network during all mission phases **[39]**.

The 34 m beam waveguide (BWG) antenna at the DSN facilities was chosen to be the ground station antenna to maximize the potential use of its services as well as to avoid conflicts with other missions because there are more of them available at the facilities. In addition, the 34 m high efficiency (HEF) specifications are closely aligned with the 34 m BWG antenna, which enables a switch to it if needed. Furthermore, NASA plans to add more 34 m antennas at each site and slowly phase out their expensive-to-maintain 70 m antennas [16].

## Communication Architecture

The overall architecture is developed from analysis of the requirements and the results of the trade study findings. One high gain parabolic reflector antenna will be used for uplink of commands and downlink scientific data to DSN. Two medium fan beam antennas will be used for near-Earth use and act as an

emergency antenna because they provide coverage to DSN during all mission phases with minimal pointing requirement and provide the needed link margin.

The X-band science channel will be used for all uplink and downlink commands and data. The X-band solid-state amplifier validated on Mars Exploration Rovers and Mars Science Lab Rovers is used to increase link margin [40].

The redundant Motorola transponders, first validated on Deep Space-1 and then used on majority of NASA missions beyond the moon since the Mars Odyssey will be used to modulate, demodulate, and control the modes of operation of the communications system [34].

Table III.38 shows the link budget for the high and medium gain antennas. They provide positive link margins and meet the DSN requirements. The link budgets used a propagation range of 17 million km, which is the largest distance possible dictated by a one-month launch window from the proposed month and year, to mitigate risk of not having needed link margin.

**Table III.38.** High Gain and Medium Gain Antenna Link Budget where 12dB link margin for DSN is achieved at largest propagation range of 17 million km **[16]**.

| | | **High Gain Antenna** | | **Medium Gain Antenna** | |
|---|---|---|---|---|---|
| **Parameter** | **Units** | **Uplink** | **Downlink** | **Uplink** | **Downlink** |
| Propagation Range | km | $1.7 \times 10^8$ | $1.7 \times 10^8$ | $1.7 \times 10^8$ | $1.7 \times 10^8$ |
| Transmit Frequency (X-band) | GHz | 7.145 | 8.4 | 7.145 | 8.4 |
| Data Rate | Mbps | 5 | 125 | 0.2 | 0.2 |
| Transmit Diameter | m | 34 | 1 | 34 | |
| Transmit Beamwidth | deg | 0.0864 | 1.667 | 0.0864 | |
| Transmit Efficiency | % | | 70% | | |
| Transmit Gain | dB | | 30 | | 18.8 |
| Transmit Power | dBW | | 7 | | 10 |
| Backoff+Line Losses | dB | | -4 | | -4 |
| Transmit EIRP | dBW | 109.5 | 33 | 109.5 | 48 |
| Space Loss | dB | -274.14 | -275.54 | -274.14 | -275.54 |
| Atmospheric Losses | dB | -5 | -5 | -5 | -5 |
| Receive Diameter | m | 1 | 34 | | 34 |
| Receive Beamwidth | deg | 1.667 | 0.0864 | | 0.0864 |
| Receive Efficiency | % | 70% | | | |
| Receive Gain | dB | 30 | | 18.8 | |
| Backoff+Line Losses | dB | -4 | -4 | -4 | -4 |
| System Noise Temp | dBK | 27 | | 27 | |
| Receive Power | dBW | -93.52 | -173.30 | -123.22 | -181.50 |
| Received Eb/No | dB | 41.09 | 12.20 | 25.37 | 12.5 |
| Required Eb/No | dB | 9.6 | 7 | 9.6 | 7 |
| Implementation Loss | dB | -1 | -1 | -1 | -1 |
| Link Margin | dB | 30.49 | 4.20 | 14.77 | 4.50 |

The spacecraft is required by the RFP to return the data collected by the science mission to the ground via downlink. This downlink is completed via the DSN periodically throughout the mission. The requirements for the sizing of the communications and how those requirements are met are listed in Table III.39 below.

**Table III.39.** TRIDENT communications requirements established to provide data collected from science payload to researchers on the ground.

| Req. # | Req. Text | Compliance |
|---|---|---|
| 1.1.5 | The mass of the communications system shall not exceed 25 kg. | Mass of Communication system is estimated to be 21.47 kg |
| 3.1.2 | The spacecraft shall provide periodic link capabilities to the ground through the Deep Space Network during mission operations. | Met through use of X-band frequency and 34 m BWG antenna provide by DSN |
| 3.1.2.1 | The spacecraft shall maintain a minimum link margin of 12 dB for uplink communications between the spacecraft and the ground station. | Link margin = 30.49 dB (Table III.38) |
| 3.1.2.2 | The spacecraft shall maintain a minimum link margin of 12 dB for downlink communications between the spacecraft and the ground station | Link Margin for downlink using high gain antenna is 30.49 dB |

## III.H Command and Data Handling System

### Design Overview

The command and data handling system (C+DH) receives all commands and data for both bus and payload operations from the communications system. The integration of payload data with bus data into the data stream bound for the communications system and the disintegration of the incoming data stream into individual data streams bound for the bus and payload are the primary roles of the C&DH system [41]. The Power RAD750® made by BAE Systems is the selected processor and the Solid State data recorder (SSDR) developed by SEAKR is the selected data storage device.

### C+DH Architecture

The C+DH system is driven by the processing required to interact with the infrastructure instruments on the spacecraft (power generation, guidance, navigation, propulsion and communications). The Power RAD750 has been selected to act as the onboard processor; it is the highest performance radiation-hardened general-purpose processor available. Such a high performance processor was required

to accommodate the complexity of the various modes of operations, such as the various science data collection phases. The RAD750 is a reliable processor first used on JPL's Deep Impact mission and has flown in a large number of missions since then [42]. It has a mean time between failure of >390K hours. This increases the reliability and reduces the risk of malfunction [43].

A concept of operations of the science data collection is given in Figure III-11 below where the duration and the number of links to DSN is minimized while assuring the success of science objectives by collecting necessary amount of data with required accuracy.

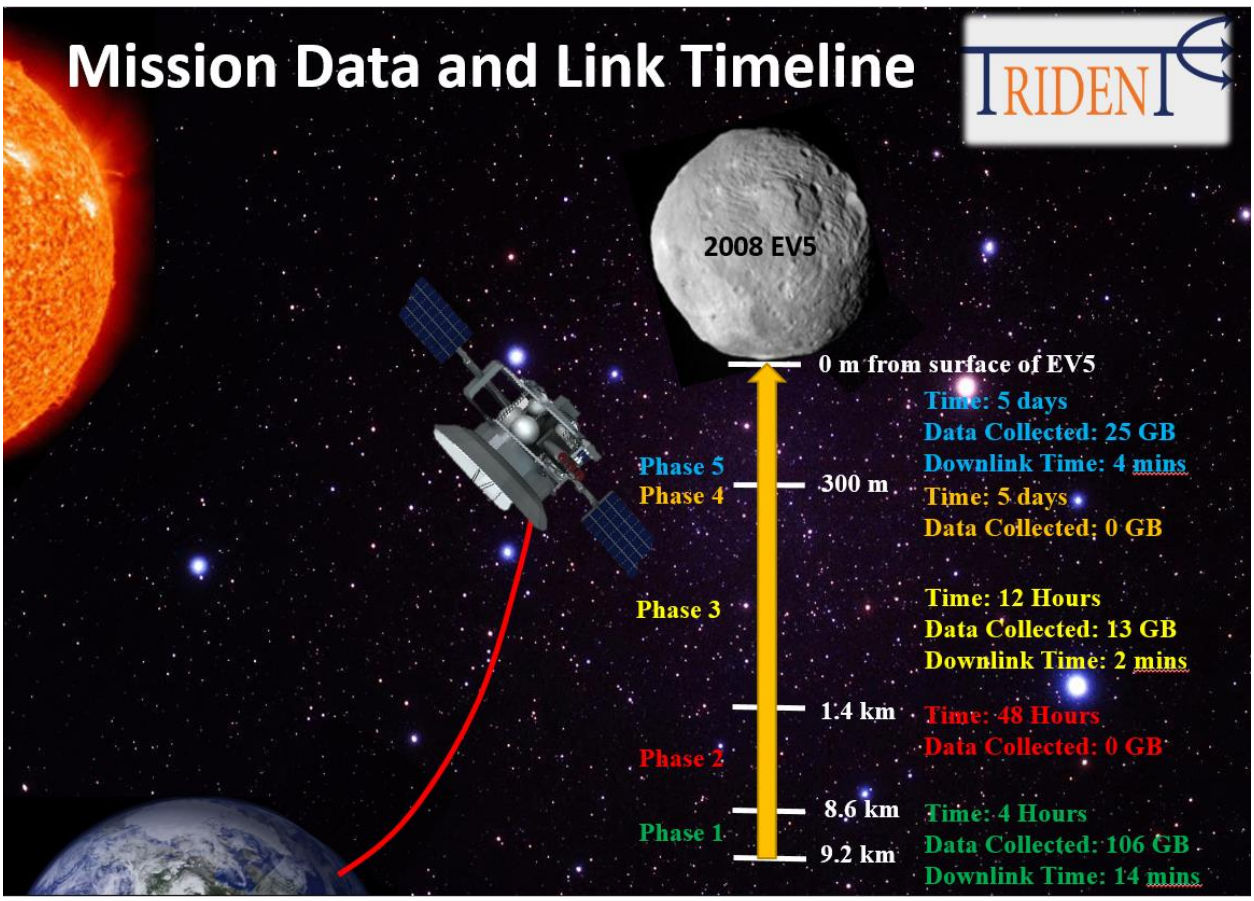


**Figure III-11.** Concept of Operations of Science Collection optimized to minimize usage of DSN and meet science objectives.

Figure III-11 above also shows the amount of data collected during respective phases. The largest amount of data collected is at the end of Phase 1, where the HRC operates for 4 hours and collects

approximately 106 GB of data. The amount of data collected during the other phases of the mission is much lesser when compared to Phase 1.

The data storage will be done using a solid-state data recorder (SSDR) because of the amount of onboard data storage required. SEAKR Engineering Incorporation's SSDR will be utilized because of its heritage and reliability. SEAKR has delivered over 150 spacecraft memory/processing systems and are presently on contract for over 30 additional units. To date, they have never had an on-orbit failure [44]. Hence, SEAKR will be contracted to make a custom SSDR of approximately 120 GB for the TRIDENT mission.

The design of the TRIDENT mission requires science data collected to be downlinked to the ground via the communications system. However, the downlinks are not constant. Therefore, onboard data storage is required. The derived requirements for the onboard storage in the C+DH system and how those requirements are met are included in Table III.40.

**Table III.40** C+DH requirements established to provide onboard storage for science data prior to downlink.

| Req. # | Req. Text | Compliance |
|---|---|---|
| 1.1.6 | The mass of the command and data handling system shall not exceed 35 kg. | Mass of Command and data handling system is estimated to be 30.6 kg |
| 3.1 | The spacecraft shall provide onboard systems to return data to the ground station during mission operations. | C+DH architecture incorporates a solid state data recorder |
| 3.1.1 | The spacecraft shall provide onboard data storage for data retention prior to data downlink. | SSDR and RAD 750 provide sufficient storage for data collected |
| 3.1.1.1 | The spacecraft shall be capable of providing a minimum of 105 GB of onboard data storage for collected science data. | Custom-made SSDR developed by SEAKR can provide the needed storage of at least 106 GB |

### III.I Thermal Control System

The TRIDENT mission was designed to keep the spacecraft in safe, relatively benign thermal environments so that efficient, cost effective, 100% passive thermal control elements can be utilized. The thermal environment faced by the spacecraft during the mission can be divided into two extremes; the hot case and the cold case. These two cases uniquely define the requirements for the thermal control system as

all other thermal stresses are mitigated by the system which successfully manages the vehicle at both extremes. Satisfying the extreme case requirements also integrates temperature margins into the real mission. The hottest possible case is defined as a time when the asteroid is at perihelion, the spacecraft is passing over the sunlit side of the asteroid, and is in its operational state (where internal power generation is at a maximum.) The coldest possible case occurs at the farthest point of the trajectory from the Sun (while in transit) and when the spacecraft is in its low power state. These environments and their associated stresses on the spacecraft are summarized in Table III.41.

**Table III.41.** TRIDENT's mission profile has been designed to keep the spacecraft in benign thermal environments.

| **Mission Thermal Environment** | | |
|---|---|---|
| | **Hot Case** | **Cold Case** |
| **Solar Heating** | 1794.9 W/m$^2$ | 1266.8 W/m$^2$ |
| **2008 EV5 Albedo [45] [46]** | 0.12±0.04 | |
| **2008 EV5 Emissivity [45]** | 0.90 | |
| **Absorbed Radiation from EV5 [46]** | 423.30 W | - |
| **Heating by Spacecraft Components** | 125.0 W | 60.0 W |

The spacecraft faces heating from the Sun, infrared radiation from EV5, energy from EV5's albedo, and heat from the vehicle's own electrical components. Determining EV5's albedo, radiation, and other thermal properties is part of the mission's primary objectives as described in Section II so data and observations from NASA's Wide-field Infrared Survey Explorer (WISE) among other sources ( [46] [45] [47]) are used here to the degree the data are known. EV5 is estimated to reach temperatures as high as 360 K on the surface making its emitted radiation a significant source of heating when the vehicle is at such close proximities to the asteroid [46].

TRIDENT's thermal control system is fully passive, involving no heaters or louvres. This is achieved by balancing the number of layers and the strategic placement of multi-layer insulation (MLI) blankets. About 70% of the spacecraft's main bus will be covered in MLI blankets, which excludes the high gain antenna, solar arrays, and main engine face as they are fully capable of functioning unprotected through the mission duration. The remainder will be covered with a varying number of layers of thin aluminized Mylar, with the number of layers dependent upon the system. Aluminized Mylar has been used since 1964

as a thermal regulation material and comes with much spaceflight experience [48]. The Mylar layers will be separated by Dacron netting, chosen for its low conductivity and minimal particulate contamination [48]. To avoid problems caused by outgassing (the release of atmospheric gasses after reaching space trapped under the MLI blankets before and during launch) the layers will be perforated.

The interior Mylar layers are thin and unsuitable for protecting the spacecraft from physical damage and environmental exposure, making the choice of outer layer material critical. Table III.42 summarizes the outer layer materials available to meet the environmental and thermal demands on the spacecraft.

**Table III.42.** The spacecraft is insulated with durable beta cloth in order to keep a safe range of temperatures.

| **Thermal Control Outer Layer Trade Study** | | | | | |
|---|---|---|---|---|---|
| | **Unprotected** | **White Surface Finish** | **Beta Cloth Layers** | **Kapton Layers** | **Teflon Layers** |
| **Layer Absorptance [49]** | 0.90 | 0.20 | 0.45 | 0.51 | 0.10 |
| **Layer Emissivity [49]** | 0.85 | 0.90 | 0.80 | 0.77 | 0.60 |
| **Effective System Mass [kg]** | - | < 0.10 | 1.45 | 0.97 | 1.62 |
| **Main Bus Maximum Temperature [ºC]** | 8.555 | 5.120 | 34.598 | 49.777 | -5.021 |
| **Main Bus Minimum Temperature [ºC]** | -23.584 | -28.089 | 5.404 | 8.734 | -38.932 |

Beta cloth was the clear choice among the surveyed materials in Table III.42 for an outer layer cover. The material provides the ideal radiative characteristics for controlling solar heating and the spacecraft's own heat radiation. It is a mechanically tough material that does not lose strength over time like Teflon. Beta cloth has been used extensively on the International Space Station (ISS) it is compatible with long exposure to ultraviolet (UV) radiation [49] and is resistant to degradation from atmospheric oxygen [49]. The flight heritage of the material ensures its reliability and low cost as a thermal control component for the mission.

During the mission's science collection phases, the attitude of the spacecraft remains approximately constant with the solar arrays facing the sun and the penetrators and the science payload facing the asteroid. This creates a substantial thermal gradient across the spacecraft's main bus, but by varying the number of

layers of aluminized Mylar and strategically configuring the spacecraft's overall layout mitigates the thermal gradient. The number of layers will vary between five layers on the sun facing side and fifteen layers near the science instruments.

Propellant boil-off is mitigated by planning the number of Mylar layers. The temperature inside the ADCS and primary engine fuel tanks will decrease over time as fuel is consumed, so all fuel tanks will be kept at lower temperatures relative to their operating temperatures. Controlling the tank temperature in this manner ensures the tanks remain at safe operating temperatures even after significant cooling from propellant exhaustion. This control scheme is achieved by using fewer layers of Mylar following the same MLI scheme as mentioned above.

The science payload requires a specific thermal environment for proper functionality, as do other systems onboard the spacecraft. The thermal system was designed to meet these requirements, and said requirements are included in Table III.43 below.

**Table III.43.** TRIDENT thermal requirements established to maintain optimal operating conditions for science payload and additional spacecraft systems.

| Req. # | Req. Text | Compliance |
|---|---|---|
| 1.1.3 | The mass of the thermal control system shall not exceed 15 kg. | Total mass of the blankets was kept below 2 kg. |
| 1.4.2 | The spacecraft shall provide thermal control and protection for the science payload for a minimum of 1 year after launch. | The MLI blankets have been specifically chosen to retain mechanical strength over many years. |
| 1.4.2.1 | The spacecraft shall maintain an operating temperature range for the main bus of 5 to 35 degrees Celsius. | Table III.42 shows the average main bus temperature keeping inside the required range. |
| 1.4.2.2 | The spacecraft shall maintain an operating temperature range for the propulsion system of 30 to 50 degrees Celsius. | MLI layers keep the propulsion system at a temperatures according to their boil-off and operating requirements. |

## III.J Structures System

### Requirements

The main purpose of the structures system will be to provide housing and safety of all the other systems onboard the spacecraft. The structure will experience high vibrations and stresses during the launch phase, main propulsive maneuver, attitude adjustments, and during launch of the penetrators from the spacecraft. The following image Figure III-12. shows the main frame of the spacecraft structure.

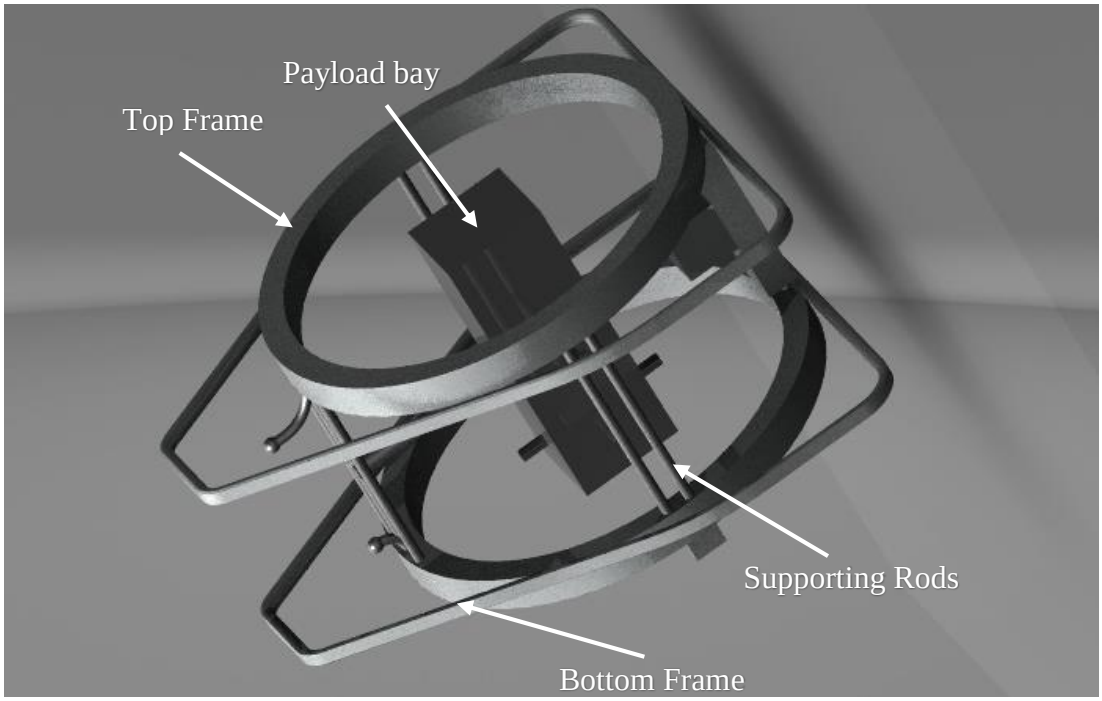

**Figure III-12.** Spacecraft primary structure to support and protect the systems

Along with the safety of the instruments on board and the structural support of all spacecraft components, the structure will have to be reliable and of low cost. As seen in Figure III-12 the primary structure will consist of the bottom frame, top frame, payload bay, and the supporting rods to hold it all together. The primary structure will have a honey comb structure along with the skin being thickened by about 5mm. The honeycomb structure will allow the frame to absorb the stresses from the launch conditions and from maneuvering. This will also keep the mass of the primary structure within reasonable limits.

The spacecraft structure was designed to contain the science payload and additional systems while still meeting the mass requirement of the selected launch vehicle. The derived requirements for the structures systems are listed below in Table III.44.

**Table III.44** Structural requirements established to ensure spacecraft mass and volume remain within constraints of the launch vehicle.

| Req. # | Req. Text | Compliance |
|---|---|---|
| 1.1.2 | The mass of the spacecraft structure shall not exceed 55 kg. | The total mass of the structure is 48 kg. |
| 1.1.3 | The structure shall absorb the stresses during the launch conditions and maneuvering | High tensile materials are used to absorb the stresses without fracturing. |
| 1.1.4 | The structure shall withstand the damages due to the MMODs | The primary structure of the spacecraft has materials with high tensile stress. The structure is also thick enough to withstand impacts from MMODs |

## Material Selection

Materials were selected to ensure integrity of the overall structure. Aluminum 2090-T83 will be used for manufacturing the main bus and the top and bottom part of the main frame. This material has a high yield strength, low density, and a low cost, $1.90/kg [50] compared to the alloys shown in Table III.45.

**Table III.45.** Aluminum Alloy and Kevlar have the mechanical properties suitable for our mission such as low density and high tensile strength [28]

| **Material** [51] | **Density (kg/m^3)** | **Young's Modulus E (GPA)** | **Yield Strength Sy (MPA)** |
|---|---|---|---|
| **Aluminum Alloy** | | | |
| 6061 T6 | 2800 | 68 | 276 |
| 7075 T6 | 2700 | 71 | 503 |
| 2090-T83 | 2810 | 71.7 | 504 |
| **Magnesium Alloy** | | | |
| AZ31B 1700 | 1700 | 45 | 220 |
| **Titanium Alloy** | | | |
| Ti – 6AL 4V | 4400 | 110 | 825 |
| **Beryllium Alloys** | | | |
| S 65 A | 2000 | 304 | 207 |
| S R 200E | | 345 | |
| **Ferrous Alloys** | | | |
| INVAR | | 150 | |
| AM 350 | 7700 | 200 | 1034 |
| 304L Ann | 7800 | 193 | 170 |
| **Fiber Composites** | | | |
| Kevlar 49 0deg | 1380 | 76 | 1240 |
| /epoxy 90deg | 1380 | 5.5 | 30 |
| Graphite 0 deg | 1640 | 220 | 760 |
| /epoxy 90deg | 1640 | 6.9 | 28 |

The main bus experiences the most force compared to any other component of the spacecraft because the engine is directly underneath it. Therefore, Al 2090-T83 has been chosen for this design due to

its toughness. In addition, Al 2090-T83 has been used on previous space missions and is an easily weldable alloy [52].

All the beams and rods used to hold and support the structure, such as the science instruments and gas tanks, will be made out of fiber composite. For this spacecraft, due to high stresses and based on the analysis from the following table, Kevlar will be chosen to withstand vibrations due to the launch conditions and the main engine burn.

### III.K Spacecraft Configuration

The spacecraft benefits from its inherited triangular shape for stability during maneuvering and for structural feasibility. As seen in the assembly shown in Figure III.13, the spacecraft will have a top and bottom frame which shall be held together by side spars. The payload bay will be in the center to secure all the sensitive instruments on-board. The propellant tanks for the main engine, the thrusters, and the oxidizer tanks will be around the main payload bay to maintain the center of mass within the core of the spacecraft. The frame of the spacecraft will support the two solar panels. The main engine will be placed on the bottom of the spacecraft to ensure the safety of the instruments on board and 12 thrusters will be placed around the spacecraft for attitude control. The camera, spectrometer and the penetrator deployment system will be fixed to the main frame by spars as well. The high gain antenna will be fixed on top of the satellite. Figure III-13 shows an explosion of the spacecraft assembly along with some of the major systems labelled out.

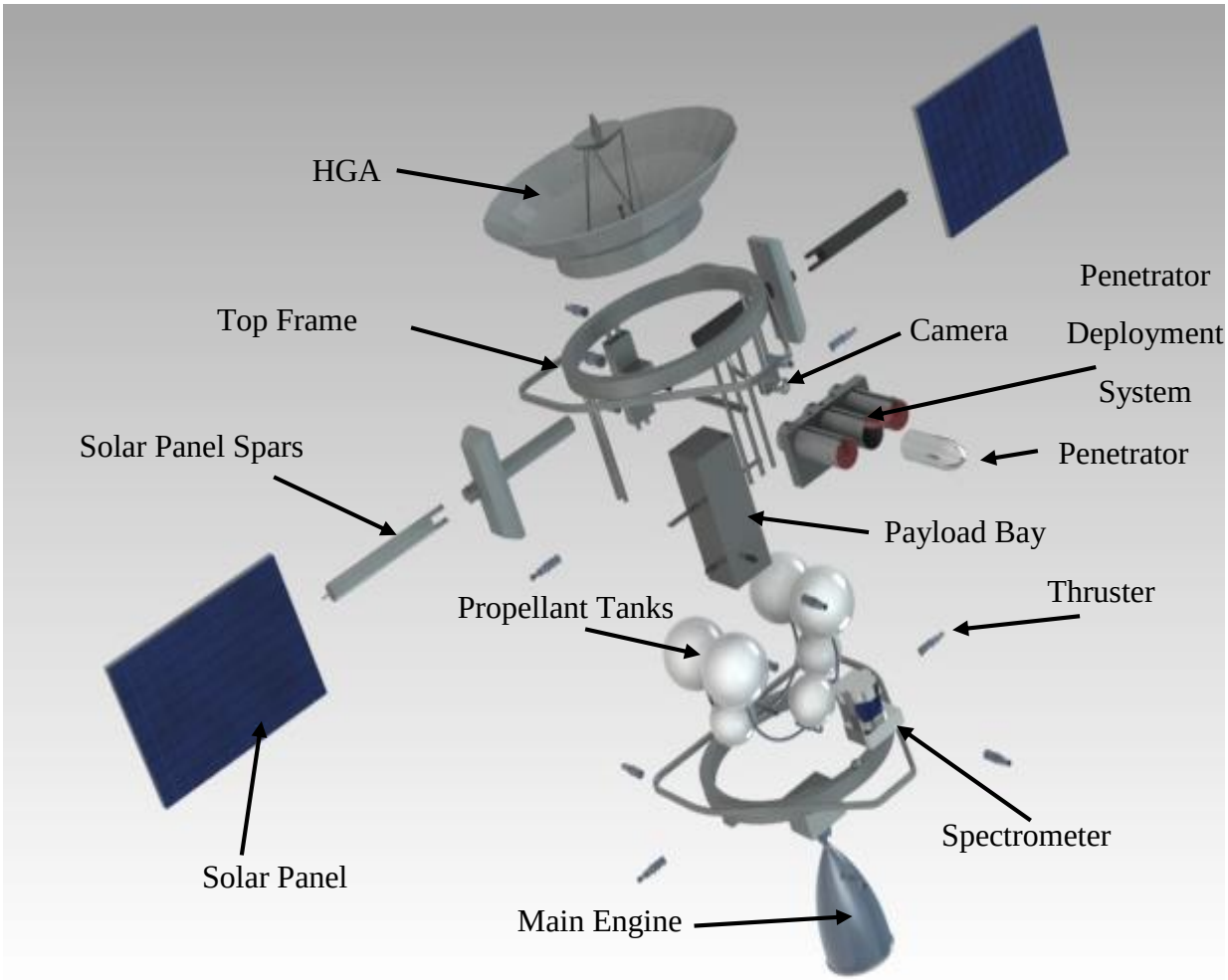


**Figure III-13.** Explosion of the spacecraft assembly to show the major components onboard and how they fit together

Figure III-14 below shows the engineering drawing with the dimensions of some of the major components of the spacecraft. These dimensions were chosen to stay within the 'small satellite' requirements.

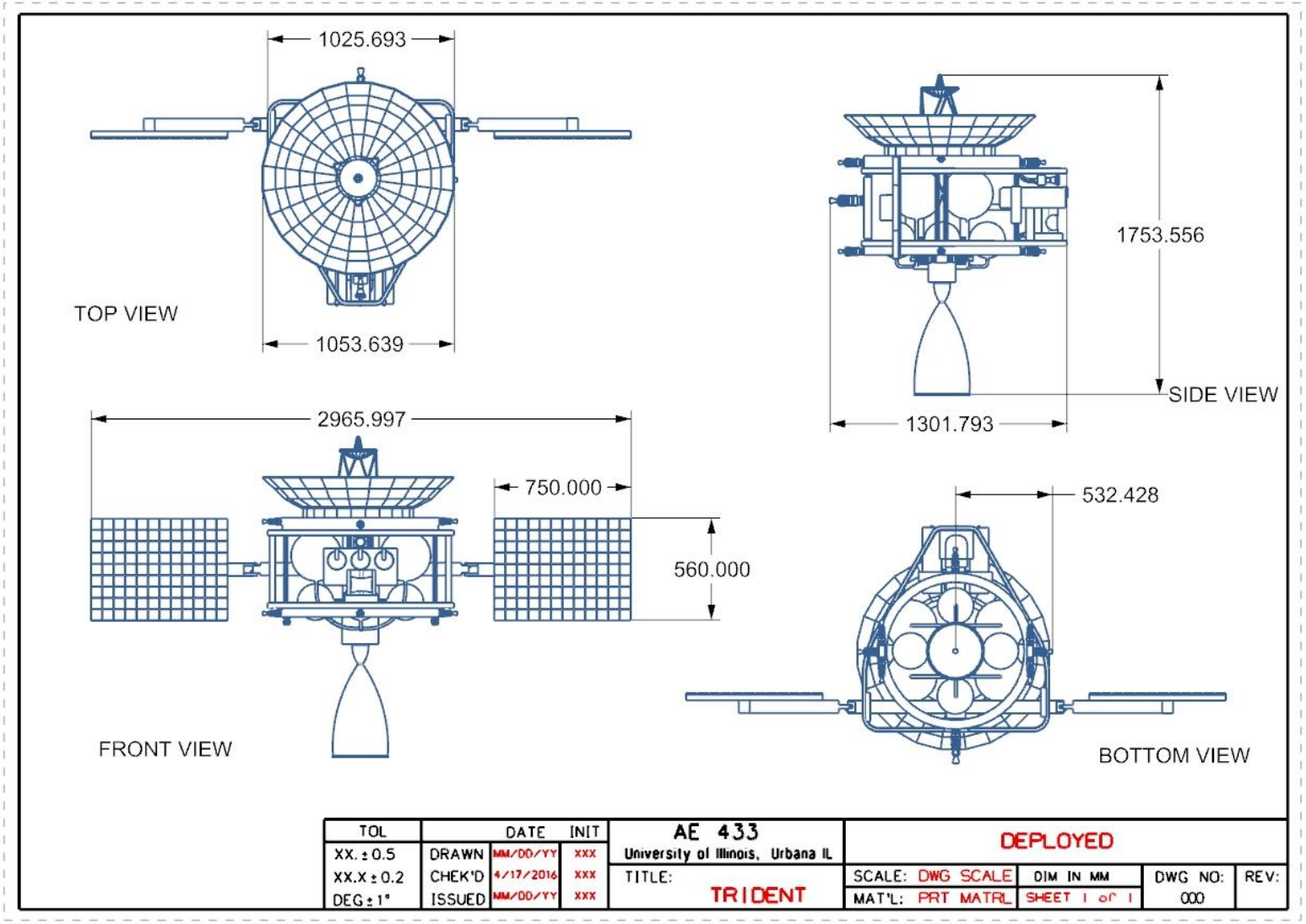


**Figure III-14.** Engineering Drawing of the spacecraft after deployment

Apart from structural stability and maneuvering stability, this configuration also allows the solar panels to fold in and be able to fit within the Minotaur payload bay. When deployed, the spacecraft will be too large to fit in the rocket, but the solar panel deployment mechanism will allow the spacecraft to fit within the payload bay of the Minotaur.

Figure III-15 shows the engineering drawing of the un-deployed spacecraft when it will be inside the Minotaur 1 rocket. The payload fairing of minotaur 1 rocket has a diameter of 1.44 m and a height of more than 2 m [9]. As seen in the drawing below, when the spacecraft is un-deployed, it can easily be placed inside the Minotaur 1 payload fairing.

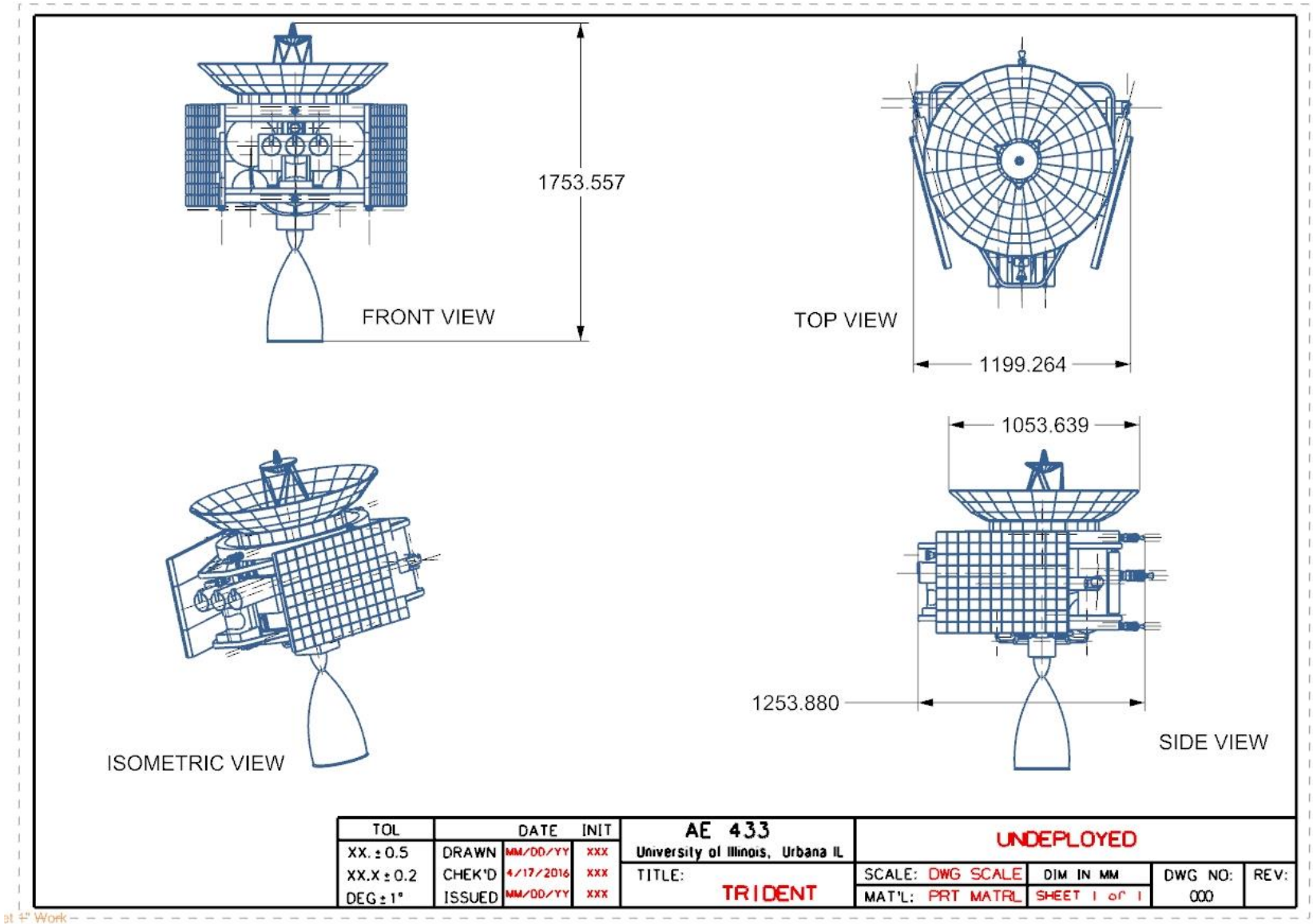


**Figure III-15.** Engineering drawing of the un-deployed spacecraft showing the major dimensions. These dimensions are within the required limits for the payload fairing on the launch vehicle. Dimensions in mm

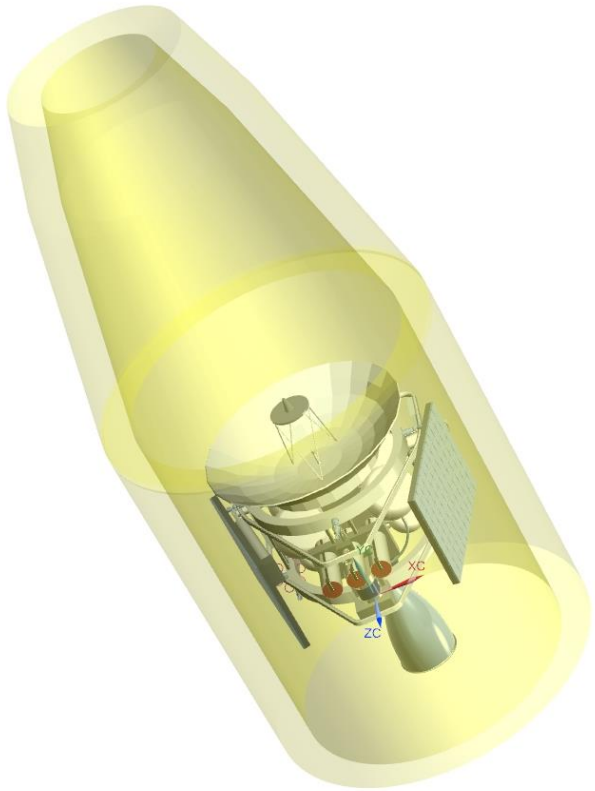


**Figure III-16.** The yellow section is the payload fairing of the Minotaur 1. The spacecraft fits within the Minotaur payload fairing.

The solar panels are made to fold in such a way that the solar cells are pointing outside the satellite. This configuration was selected in case the battery dies out before the satellite gets released from the launch vehicle. Therefore, if the solar panels are facing outwards, then the panels can charge the battery and power the systems until they can be deployed and make the satellite fully functional. They will also be facing outwards from the spacecraft in case the solar panel deployment mechanism fails to function.

If the solar panels fail to deploy, they will be able to provide sufficient power along with the battery to go through with the mission albeit with an increased mission duration. The solar panels are placed in a way that the impactors can still be released and the spectrometer and the camera will still be able to function. This configuration can be seen in Figure III-17.

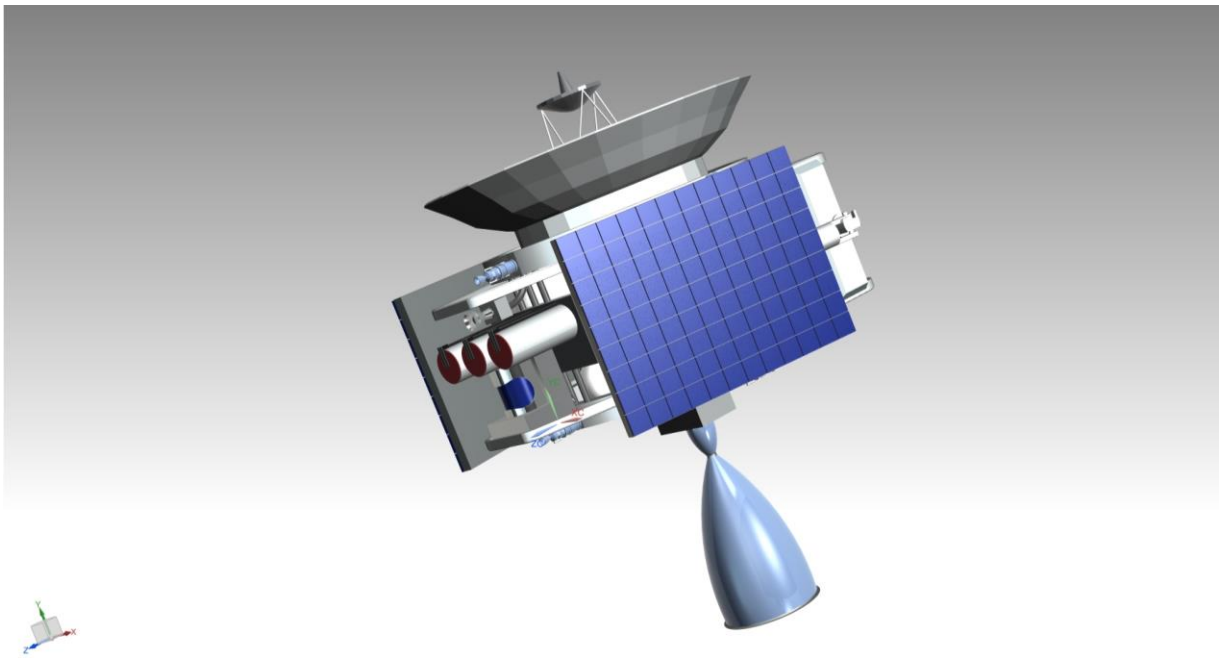

**Figure III-17.** Model of the spacecraft during its un-deployed phase

12 small thrusters are chosen for attitude control of the spacecraft where 4 thrusters are used to control the attitude for each axis, 2 in clockwise and 2 in counter clockwise direction. They are placed directly on the main frame of the spacecraft because it can withstand high stresses.

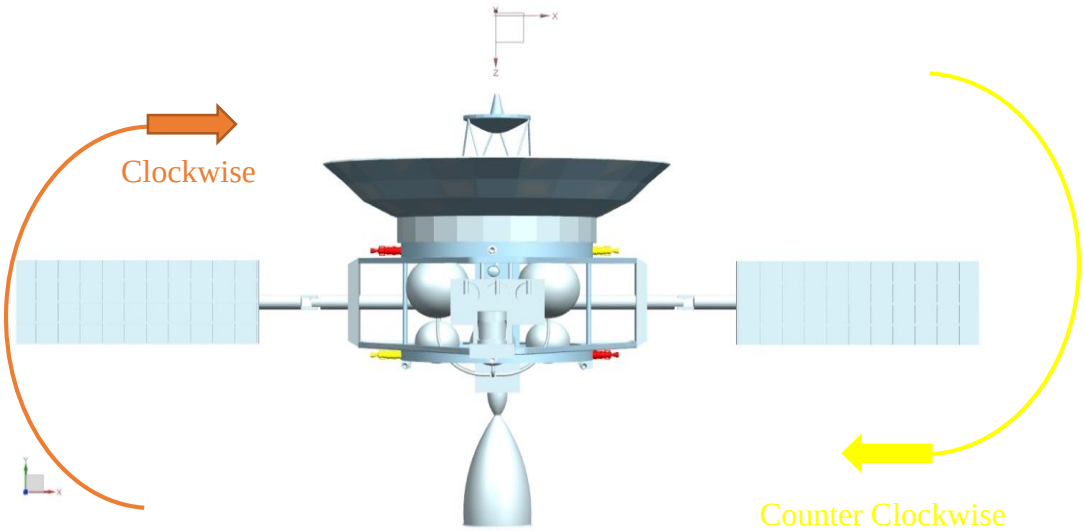


**Figure III-18.** Roll Control

Figure III-18 shows the thrusters for roll control of the spacecraft. When the thrusters fire, it will spin along its y-axis.

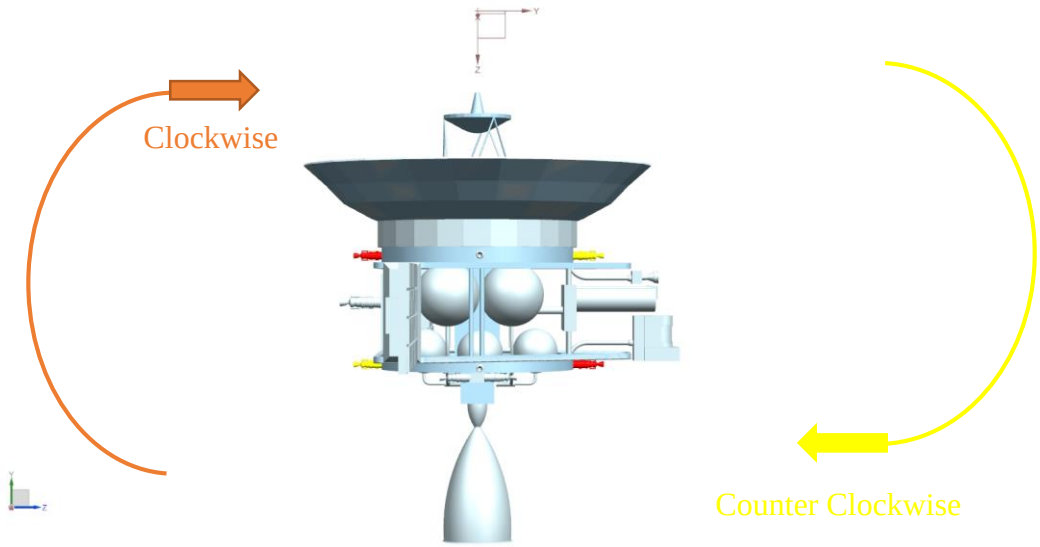


**Figure III-19.** Pitch control

Figure III-19 shows the thrusters for pitch control of the spacecraft. When the thrusters fire, it will spin along its x-axis.

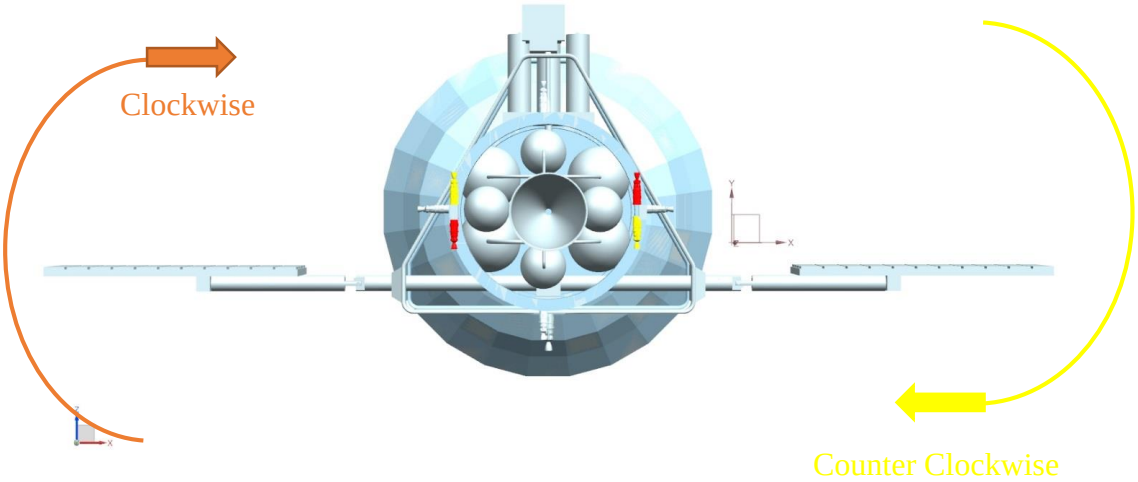


**Figure III-20.** Yaw Control

Figure III-20 shows the thrusters for yaw control of the spacecraft. When the thrusters fire, it will spin along its z-axis.

There will also be a larger (20 N) thruster placed on the back of the spacecraft to counter the impulse generated when the penetrator is deployed. It will also be used for attitude control and trajectory correction as well during the maneuvering and the main engine burns.

The high gain antenna will be placed on the top of the spacecraft and the main engine will be at the bottom of the spacecraft, with the solar panels facing outwards in the y-axis. This configuration has been chosen to point the antenna at the Earth to maintain the link and so that the solar panels are always facing the sun throughout the entirety of the mission. The science instruments will be placed opposite to the solar panels so that they can always be pointing at the asteroid as shown in the figure below.

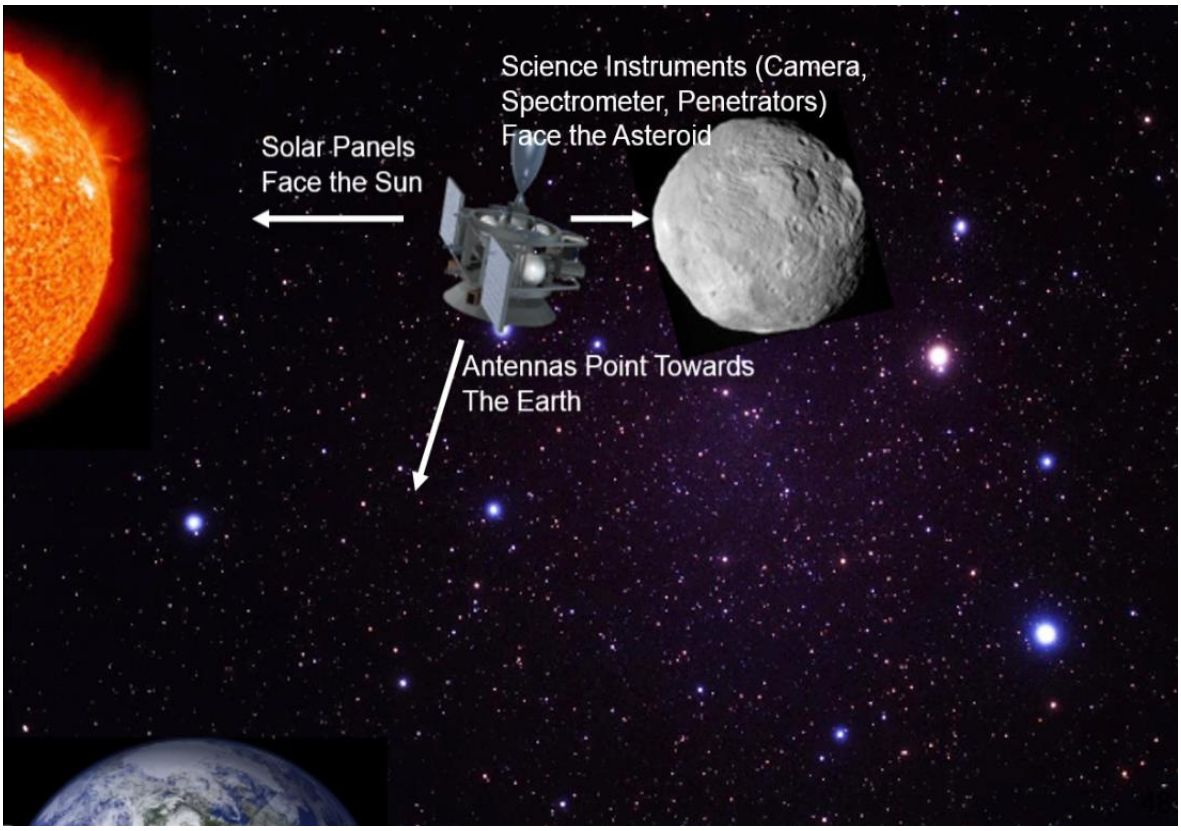


**Figure III-21.** Placement of science instruments, solar panels and the antennas.

The spacecraft structure was designed to contain the science payload and additional systems while still meeting the mass requirement of the selected launch vehicle. The derived requirements for the structures systems are listed below in Table III.46.

**Table III.46** Structural requirements established to ensure spacecraft mass and volume remain within constraints of the launch vehicle.

| Req. # | Req. Text | Compliance |
|---|---|---|
| 1.5 | The spacecraft shall have a total volume less than 3.314 cubic meters | Figure III-15. shows the dimensions of the spacecraft when un-deployed. Using the maximum dimensions of the spacecraft, the volume is calculated to be 2.55 cubic meter |
| 1.5.1 | The spacecraft shall have a diameter less than 1.44 m | The diameter of the spacecraft in un-deployed state is 1.25m. Figure III-15. |
| 1.5.2 | The spacecraft shall have a height less than 2.035 m | The maximum height of the spacecraft is 1.75m. |

## III.L Assembly, Test, and Launch Operations

Assembly, Test, and Launch Operations (ATLO) will occur across multiple facilities in the United States and will utilize existing ATLO infrastructure to meet the needs of the mission phases. Spacecraft assembly will occur in a clean-room facility procured by the University of Illinois at Urbana-Champaign (UIUC), either on- or off-campus. This clean room facility will also provide preliminary system testing capabilities to allow system and component hardware tests to be conducted prior to final assembly. For the TRIDENT mission, the spacecraft hardware primarily consists of off-the-shelf components with a Technology Readiness Level (TRL) of 9, and will therefore require minimal individual testing. However, system and integrated tests will be conducted as necessary prior to final spacecraft assembly.

Assembled spacecraft environmental tests will be conducted at third party facilities across the United States. The use of existing test methods, fixtures, and facilities will be utilized in order to minimize mission costs. Each of the tests will verify that the spacecraft meets functional requirements prior to launch and will validate mission modes of operation. The specifics of each environmental test will be determined by the PI.

After spacecraft environmental tests have concluded, the spacecraft will be transported to the Orbital ATK (ATK) Minotaur Processing Facility (MPF) at Vandenberg Air Force Base, CA. At the MPF, the payload will be integrated with the Minotaur I upper stack and enclosed in the payload fairing [10]. The upper stack of the Minotaur I will then be transported to Cape Canaveral Air Force Station where final rocket assembly will take place. Rocket and payload integration tests occur throughout the payload integration and final rocket assembly process to maximize the probability of mission success. Figure III-22

below, from the Minotaur I User's Guide, details the launch vehicle (LV) integration process prior to launch.


**Figure III-22.** LV and payload hardware flow utilizes existing ATK facilities to complete final integration **[10]**.

For the final ATLO process of integration with the LV, ATK will supply LV program and mission management, payload integration and test engineering, launch site operations support, and multiple facilities [10]. Over a 24 month period prior to launch, ATK program and mission management coordinate mission analysis, formal reviews, and documentation relating to spacecraft launch with UIUC [10]. ATK will also conduct the payload integration and test procedures with input from the UIUC team. Finally, Table III.47 below details the facilities utilized throughout the payload integration through launch phases.

**Table III.47.** Existing facilities utilized in ATLO phase to leverage proven processes and technology [10] [53].

| Facility Name | Facility Location | Facility Description | Facility Use |
|---|---|---|---|
| Minotaur Processing Facility (MPF) | Vandenberg Air Force Base, CA | 48,000 sq. ft. facility with LV processing capabilities | LV tests and payload integration site |
| Payload Processing Facility (PPF) | Third-Party Facility, TBD | N/A | Payload checkout and launch preparation site |
| SLC-46 | Cape Canaveral Air Force Station | Single launch pad on 70 acres primarily used for small LVs | Final LV assembly and launch site |

## III.M Management and Schedule

### Management Hierarchy

The TRIDENT mission will be led by a PI who will act as a final authority on all mission related decisions. He or she will lead the program office and work with the science investigation team and advisory board to guide mission decisions towards success. The organizations responsible for mission success include UIUC, launch provider ATK, and launch location provider NASA Kennedy Space Center (KSC). The full management hierarchy in Figure III-23 below details the roles and responsibilities of mission management. TRIDENT's management hierarchy was developed based on the management hierarchies of previous NASA missions and proposals [54].

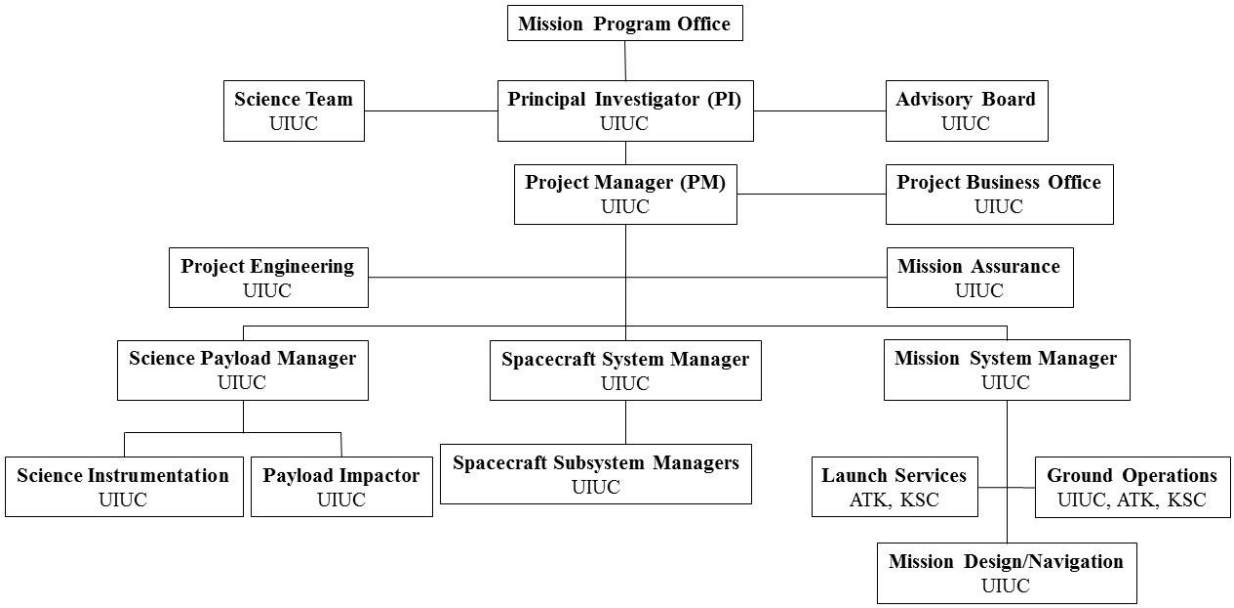


**Figure III-23.** Mission hierarchy details clear lines of authority to allow for efficient decision-making

As seen in Figure III-23, UIUC is the primary organization responsible for TRIDENT activities related to science mission and payload design, spacecraft design, spacecraft manufacturing and assembly, and mission operations. Using team members from a single location allows for efficient resource sharing and quick communication between team members. Using UIUC as a primary organization also allows for the utilization of university professors and graduate students in mission development, which translates to lower labor costs than third party engineering firms. ATK is also responsible for mission success as it relates to launch vehicle planning, hardware, and operations. This includes acquiring launch and operations facilities at KSC. All ATK actions will be coordinated through the UIUC Mission Systems Manager to ensure a successful launch.

## Proposed Mission Development Schedule

The TRIDENT mission schedule was derived from historical scheduling data of previous NASA missions with similar scope and capabilities [54] [55]. Figure III-24 details the mission phases, major reviews, critical path, and workflow progression for the TRIDENT mission. Project reviews in Figure III-24 are identified in Section 0. Table III.48 highlights the mission schedule reserve throughout the mission development timeline.

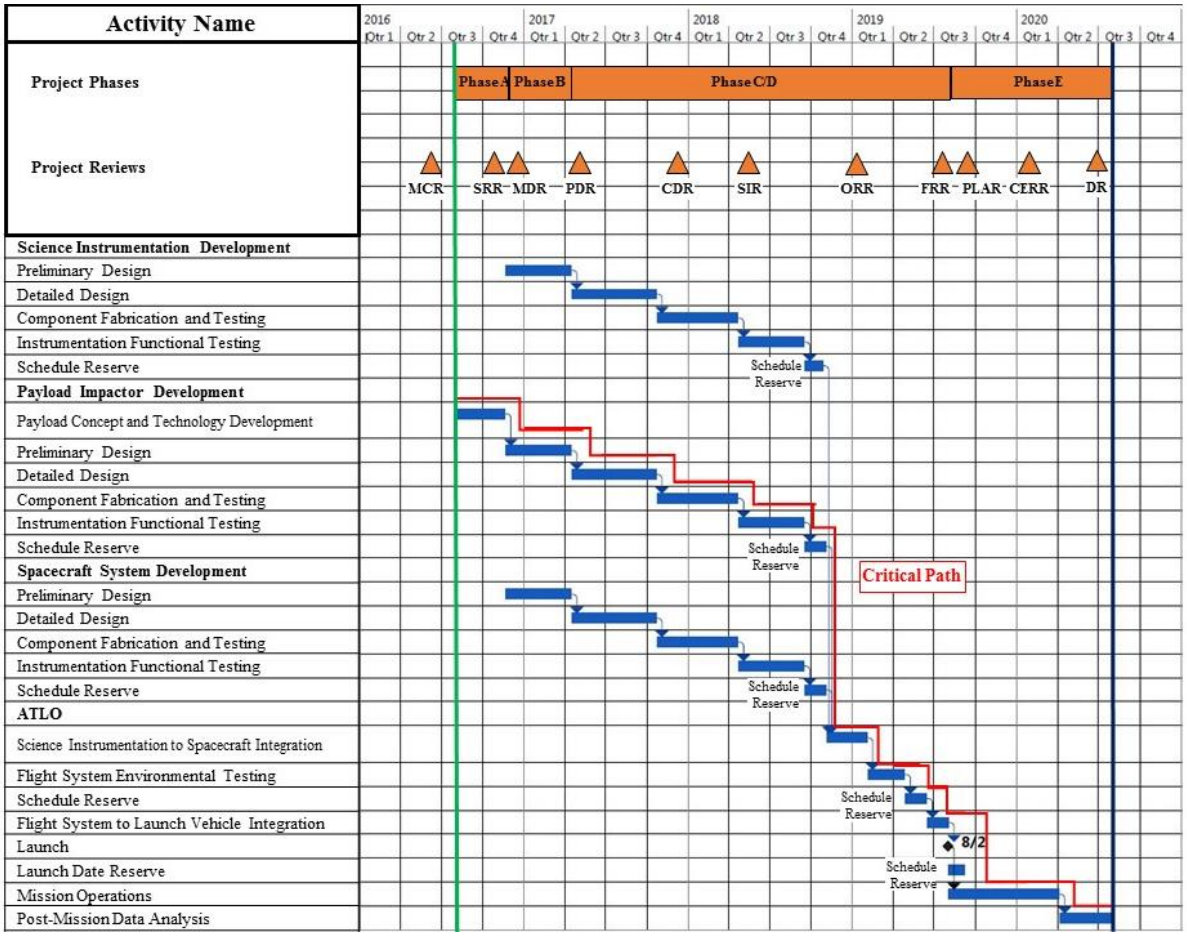


**Figure III-24** Schedule from award to completion ensures mission success within budget and duration requirements.

**Table III.48.** TRIDENT schedule reserve allows for variability in mission development and operations.

| Schedule Reserve Location | Duration |
|---|---|
| Science Instrumentation Development | 90 days |
| Payload Impactor Development | 90 days |
| Spacecraft System Development | 90 days |
| ATLO | 90 days |
| Launch Date | 30 days |
| Mission Operations | 60 days |
| Total Schedule Reserve | 450 days |
| **Total Reserve along Critical Path** | **270 days** |

The above schedule and reserve was designed to allow time for each of the mission segments detailed in Figure III-24 to be successfully completed while also meeting the mission requirements outlined in Table III.49 below. Said requirements were derived from the overall mission budget of $100 million US

dollars as well as the mission goal of a 36-month Phase A-D mission timeframe, similar to Discovery-class NASA missions [56].

**Table III.49.** TRIDENT scheduling requirements established to meet primary cost requirement of $100 million US dollars.

| Req. # | Req. Text | Compliance |
|---|---|---|
| 4.9 | The mission development through launch phases shall not exceed a duration of 3 years. | 3 year Phase A-D plan (See Figure III-24) |
| 4.10 | The mission development through launch phases shall include a minimum schedule margin of 10% of the development duration along the critical path. | 9 months of planned reserve along critical path (See Table III.48) |
| 4.11 | The mission launch through operations phases shall not exceed the duration of 1 year. | 1 year Phase E plan (See Figure III-24) |
| 4.12 | The mission launch through operations phases shall include a minimum schedule margin of 10% of the operations duration. | 2 months of planned reserve in operations (See **Table III.48**) |

## III.N Anticipated Risks and Mitigation Strategy

Minimizing risk has been a constant driving factor in the design process for the proposed mission from the outlining of the top mission objectives down to each individual system. The mission readily meets goals laid out in the RFP to use simple, proven technologies to reduce risk and increase reliability.

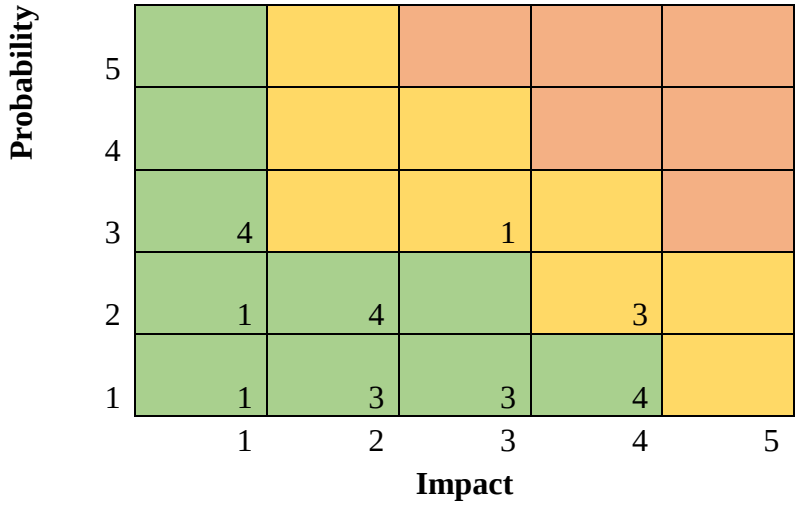


**Figure III-25.** TRIDENT's risk profile shows the results of the mission's successful mitigation strategy. See Table III.50 for specific mitigation strategies.

**Table III.50.** TRIDENT's risk assessment by subsystem highlights the design's ability to mitigate risks across the board. (P=Probability, I=Impact).

| Risk | P | I | Mitigation |
|---|---|---|---|
| **Mission Implementation, Development, and ATLO** | | | |
| Penetrator / Deployer development cycle not meeting requirements | 2 | 4 | • Schedule / cost margins built in to mission<br>• Penetrators designed to be simple mass objects devoid of their own subsystems<br>• Deployer based on reliable and flight verified P-POD design |
| Hardware failure during test phase | 1 | 2 | • Schedule / cost margins built in to mission<br>• Individual subsystems designed with TRL9 parts which lowers testing requirements |
| Cost overrun | 3 | 1 | • Overall cost margin of 20%<br>• Subsystems designed to be simple and flight proven |
| **Science Mission** | | | |
| Surveyed impact sites do not meet all of the requirements from Section II | 3 | 3 | See Impact site risk |
| Penetrator deployment / jettison failure | 2 | 1 | • Penetrator deployer mechanism based on reliable P-POD design<br>• Spacecraft equipped with multiple, identical penetrators<br>• Cost effective, low mass penetrators are mass objects and carrying an undeployed penetrator is a negligible burden |
| Poor impact(s) | 2 | 2 | See off nominal impact risk |
| Insufficient resolution to detect penetrators after deployment | 2 | 4 | See imaging resolution risk |
| Science instrument failure | 1 | 4 | • Instruments designed to operate independently ensuring science continues even if one or more fails<br>• Verification and testing performed before launch |
| **Orbital** | | | |
| Error accumulation during orbital transfer | 3 | 1 | • Budgeted margins in ADCS<br>• Mission flexible around positioning errors (gimballed systems and powerful sensors onboard ADCS) |
| Errors in performing plane change at EV5 | 2 | 1 | • Detailed orbital modeling and simulation<br>• Included ΔV margin capable of taking a 20% more massive spacecraft to the asteroid |
| **Propulsion System** | | | |
| Main engine failure to ignite / cease firing | 1 | 3 | • COTS TRL9 reliable engine from EADS Astrium<br>• ADCS can correct small errors during / after transfer |
| Fuel boil-off during launch | 3 | 1 | • In place fuel margins designed with boil-off in mind<br>• Thermal control designed to prevent boil-off<br>• Most of the propellant will be consumed within hours after the launch during primary ΔV maneuver |
| **ADCS** | | | |
| Thruster failure | 1 | 2 | • Twelve identical thrusters providing redundant control over each axis<br>• Reaction wheels can achieve three axis stability for up to ten thruster failures |
| Star tracker faces unforeseen interference / cannot identify spacecraft's position | 2 | 2 | • Onboard camera can also provide the same essential functionality of the tracker as backup<br>• Can use time history of attitude to continue estimating attitude |
| **Power** | | | |

| | | | |
|---|---|---|---|
| Batteries fail / have insufficient charge before solar arrays deploy | 1 | 2 | • Panels have been configured to be able to charge undeployed for a time<br>• Batteries carefully sized with reserves to ensure sufficient power |
| Solar arrays fail to deploy | 2 | 4 | • COTS TRL9 arrays and reliable parts designed into power system<br>• Extensive hardware testing and flight simulation |
| Power distribution failure to accurately distribute power | 1 | 4 | • Strategically designed redundant wiring to ensure accurate power distribution<br>• TRL9 hardware built into power system |
| **Communications and Command and Data Handling** | | | |
| High gain antenna failure | 1 | 4 | • Two low gain antennas can replace the high gain entirely in emergency situations<br>• TRL9 high gain designed with a high link margin |
| Programming bugs | 1 | 3 | • Mission reuses software and proven flight codes from previous missions<br>• Design employs codes with a lot of support experience behind them |
| Processor unit failure | 1 | 4 | • Extraordinarily powerful processor has flight history of reliably providing strong performance for many missions<br>• COTS TRL9 part |
| **Thermal Control System** | | | |
| Component overheating | 1 | 3 | • Thermal blankets perforated for outgassing protection also aids in overheat prevention<br>• Detailed thermal modeling will track time history of temperature for each subsystem<br>• MLI flexible and easy to adapt to design changes<br>• Spacecraft configuration planned for efficient temperature control |
| ADCS fuel boil off due to poor insulation shortening the lifetime of the subsystem | 2 | 2 | • Margins built into ADCS propellant mass calculations<br>• Specific analysis developed and implemented into protecting fuel tanks with MLI design |
| **Spacecraft Structure and Configuration** | | | |
| Hazardous launch environment stresses / vibrates structure beyond anticipated levels | 1 | 4 | • Comprehensive and detailed launch reports provided by launch provider<br>• Mechanical testing performed before launch<br>• Structure materials specifically chosen for continuous structural integrity |
| Errors generated from inaccuracies in center of mass calculation | 2 | 2 | • High fidelity modeling ensures accurate estimates for center of mass<br>• Powerful ADCS capable of maintaining three axis stability despite sizable errors in center of mass |
| Structural imperfection creep | 3 | 1 | • Time efficient mission duration ensures science can be completed before structure degrades beyond functional levels<br>• Benign thermal environment and well controlled subsystem temperatures slow creep |

Each system is designed to satisfy the requirements in Section 0 while attempting to lower system complexity on all levels. The mission's development has centered on using flight proven, commercial off-the-shelf (COTS) parts that have undergone significant testing and verification before being included. A detailed breakdown of each individual system's risks and their respective mitigation strategies is given in Table III.50. The major risks are counted and binned in the fever chart given in Figure III-25. Many of the risks listed are inherent to most satellite missions and their mitigation has followed standard practices; however, three specific risks are unique to TRIDENT. These unique risks are discussed further below.

### Impact Site Risk

The major risk to mission success is the performance of the mission's primary science component: the three penetrators. Impactor technology, though flight proven on a few related missions (Deep Impact, Rosetta, LCROSS, etc.), is still in its early stages for asteroid reconnaissance. Despite the inherent risks of using younger technologies like penetrators the science value of determining critical physical characteristics about asteroids such as EV5 is too important to ignore. This mission employs all necessary measures to ensure that the associated risks are mitigated in such a way that the mission can continue to produce invaluable data even in the case that the penetrator fails to operate.

Detailed surface maps of the surface of 2008 EV5 are not available for determining impact sites ahead of time (indeed, detailed surface mapping is one of TRIDENT's primary mission goals.) Because its surface is unknown, it is anticipated that the search for an impact site that is flat and relatively featureless could produce very few results (for instance, if most of the asteroid's surface is pockmarked with small craters.) To mitigate this possibility, the mission is designed to emphasize strong maneuverability, penetrator control, and imaging capability.

Though a vast area of flat, featureless surface is ideal, even non-ideal surfaces will still produce valuable science. The camera will image the penetrator before, during, and after impact on the surface; this data can still be used to determine physical properties of the asteroid even if the impact site is the edge of a crater, a sheer face of solid granite, or a loosely bonded patch of dust. Parts of the impact surface will still

be displaced no matter how the penetrometer impacts and the material below the impact will be exposed if it was not already. These effects contribute valuable science to the mission even though the impact was not ideal. Additionally, the spacecraft is equipped with three penetrators specifically to provide multiple opportunities for science data collection.

### Off-nominal Impact Risk

Ideally, the penetrators enter the asteroid surface vertically and descend into the surface such that some of the penetrator remains above the surface. There is an anticipated possibility that the penetrators descend entirely into the surface, impact at an angle (and possibly skip off the surface entirely,) break upon impact, or impact perfectly before tipping over. Similar to the impact site risk however, the data collected from such impacts would still be invaluable to determining the asteroid's surface physical features. If the penetrator descends entirely into the surface, for instance, the camera has been designed with sufficient resolution to image the impact hole left behind (and the behavior of the surface materials near the hole.) In the event that a penetrator tips over after impact, the camera will have the necessary resolution to image any marks or residual matter attached to the penetrator after its fall, from which its depth of penetration could feasibly still be determined. Should the penetrators break upon impact, the images of the broken penetrator and its impact site would still provide valuable information in determining the surface properties. There will also be a significant amount of hours (or days, depending on the PI's final impact site selection) in between penetrator deployments during which time adjustments can be made to future deployments if the first was not ideal. Any impact event in which the penetrator contacts the asteroid surface will provide valuable science, no matter how far from the ideal vertical, partially descended case it is.

### Imaging Resolution Risk

Imaging penetrators themselves after an impact has never been done in any previous mission, so TRIDENT is focused on ensuring a successful mission by equipping the spacecraft with a capable, cost effective camera. Section II details the precise analysis necessary for determining the requirements on the camera to successfully image the penetrators after impact. In the event that the first images after impact are

not sufficiently detailed to identify the post-impact status, the science and operations teams will have time between imaging opportunities in which to diagnose the problem. The mission is designed to allow several opportunities to image each individual impact site. Further, more significant changes to the science data collection process can happen in the hours or days allotted in between impact deployments

### III.O Cost and Cost Estimating Methodology

The RFP for the TRIDENT mission is titled "Low-Cost Asteroid Precursor Mission" and requires that the entirety of the mission be completed for under $100 million US dollars [1]. This requirement was a driving force in determining the mission scope and implementation method throughout the design process. The science mission design, target asteroid, and system hardware choices were all driven by the relatively low budget to maximize the amount of data collected that can be directly used for risk reduction of future asteroid missions. These efforts lead to developing the Work Breakdown Structure (WBS) seen in Figure III-26 and described below.

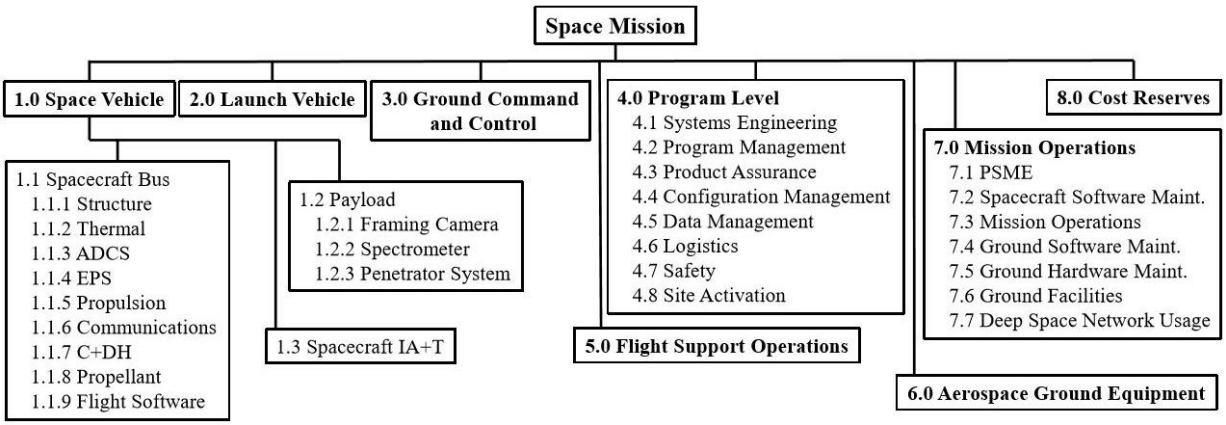


**Figure III-26.** WBS breakdown is based on NASA standards to maximize the use of standard practices. Using proven practices improves mission feasibility **[16]**.

WBS 1.0 includes the spacecraft bus, science payload, and integration, assembly, and test (IA+T) costs. These costs were estimated using the Small Spacecraft Cost Model (SSCM) (for the spacecraft bus and IA+T) in conjunction with the NASA Instrument Cost Model (NICM) (for the science payload) [16]. Cost estimates utilizing the two methods include both physical hardware costs and additional costs associated with engineering support for the design and fabrication of the system. The values derived from the SSCM and the NICM were then adjusted by a Technology Readiness Level (TRL) cost factor. TRL

factors take into account whether the technology has been proven successful in previous space. The cost factor allows the estimates to more accurately represent expected costs as proven systems are likely to be less costly than untested technologies. Table III.51 lists the TRL adjustment factors for different TRL levels and the TRL level used for each system's cost estimate. A priority in system design was placed on using high TRL hardware as its use leads to decreased costs, as can be seen from Table III.51.

**Table III.51** WBS factors allow for accurate cost estimates based on history of technology employed. TRL factors determined by availability of Off-The-Shelf hardware to meet requirements.

| TRL Number | TRL Definition | TRL Factor |
|---|---|---|
| 1 | Basic principles observed and reported | 4.0 |
| 2 | Technology concept/application formulated | 3.0 |
| 3 | Analytical and experimental critical function/characteristic proof of concept | 2.0 |
| 4 | Component validation in lab environment | 1.5 |
| 5 | Component validation in relevant environment | 1.3 |
| 6 | System model/prototype demonstration in relevant environment | 1.0 |
| 7 | System prototype demonstration in an operational environment | 0.8 |
| 8 | Actual system completed and qualified through test and demonstration | 0.7 |
| 9 | Actual system proven through successful mission operations | 0.5 |

| System | TRL Factor |
|---|---|
| Structure | 7 |
| Thermal Control | 9 |
| ADCS | 9 |
| EPS | 7 |
| Propulsion | 9 |
| Communications | 7 |
| C+DH | 9 |
| Camera | 8 |
| Spectrometer | 8 |

WBS 2.0 encompasses costs associated with the launch vehicle and was determined from previous flight information for the launch vehicle. WBS 3.0, 4.0, 5.0, and 6.0 were all estimated based on wrap factors [16]. Wrap factors provide a means of estimating costs as a function of the space vehicle cost (WBS 1.0). Wrap factors are a percentage of space vehicle cost that can be used as an estimate for other mission costs. These percentages have been determined from final mission costs of previous NASA missions and are used to estimate costs associated with the WBSs. WBS 3.0 includes costs associated with ground operations facilities during mission operations. WBS 4.0 includes costs associated with the program as a whole that are not relatable to specific spacecraft components. It includes systems engineering, program management, safety, and additional components associated with mission design coordination. WBS 5.0 encompasses costs relating to launch operations not associated with launch vehicle specifics included in

WBS 2.0. These costs include launch planning, analysis, support, and initial vehicle operations. WBS 6.0 includes costs of the integration, assembly, and test of the spacecraft prior to launch.

WBS 7.0 estimates mission operations costs. This includes management, maintenance of both the spacecraft and ground station hard- and software, and the use of existing infrastructure. Costs for WBS 7.0 were derived from relationships involving estimated source lines of code, facilities space, and engineer hours required for operations and maintenance [16]. WBS 8.0 is the cost reserve for the mission. WBS 8.0 costs are equal to the desired percentage of reserves multiplied by the sum of costs of WBSs 1.0 through 7.0. NASA Discovery missions, which are similar in scope to the TRIDENT mission, typically institute a 25% reserve [57]. TRIDENT is using a lower cost reserve, 20%, due to its lower cost requirement ($100 million versus $425 million for Discovery [58]) to allow more funds to be used to meet mission requirements.

The following tables and plots included in this section detail the breakdown of costs for the TRIDENT mission concept, sectioned by the WBS sections described previously. Table III.62 details the cost breakdown as a function of WBS. Table III.62 also verifies that the total mission cost meets the total mission cost requirement discussed previously. Table III.53 breaks down WBS 1.0 by providing a detailed cost allocation for the space vehicle, including development and hardware cost allocations for both the spacecraft bus and the science payload. Table III.54 and Table III.55 allocate cost for both WBS 4.0 and 7.0 respectively in more detail.

**Table III.52.** Total TRIDENT mission costs categorized by WBS. Total mission cost meets RFP requirement of $100 million US dollars while including 20% cost reserves.

| WBS | Description | Cost FY$16 (Millions of US Dollars) |
|---|---|---|
| 1.0 | Space Vehicle | $28.631 |
| 2.0 | Launch Vehicle | $28.800 |
| 3.0 | Ground Command and Control | $1.431 |
| 4.0 | Program Level | $16.601 |
| 5.0 | Flight Support Operations | $1.746 |
| 6.0 | Aerospace Ground Equipment | $1.889 |
| 7.0 | Operations | $4.196 |
| 8.0 | Reserves (20%) | $16.659 |
| | **Total TRIDENT Mission Cost** | **$99.953** |

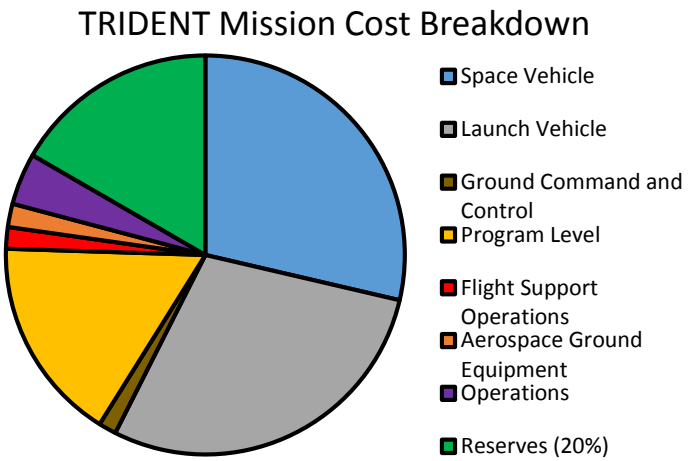


**Table III.53.** Total WBS 1.0 costs include costs allocated to meet cost requirements while providing sufficient costs to produce hardware necessary for successful mission operations.

| WBS | Description | Cost FY$16 (Millions of US Dollars) |
|---|---|---|
| **1.1** | **Spacecraft Bus** | **$19.866** |
| 1.1.1 | Structure System | $3.576 |
| 1.1.2 | Thermal Control System | $0.268 |
| 1.1.3 | ADCS | $2.928 |
| 1.1.4 | Electric Power System | $3.188 |
| 1.1.5 | Propulsion System | $1.361 |
| 1.1.6 | Communications System | $3.484 |
| 1.1.7 | C+DH System | $1.993 |
| 1.1.8 | Propellant | $0.037 |
| 1.1.9 | Flight Software | $3.031 |
| **1.2** | **Payload** | **$6.241** |
| 1.2.1 | Framing Camera | $1.174 |
| 1.2.2 | Spectrometer | $2.067 |
| 1.2.3 | Penetrator System | $3.000 |
| **1.3** | **Integration, Assembly, and Test** | **$2.524** |
| **1.0** | **Total Space Vehicle Cost** | **$28.631** |

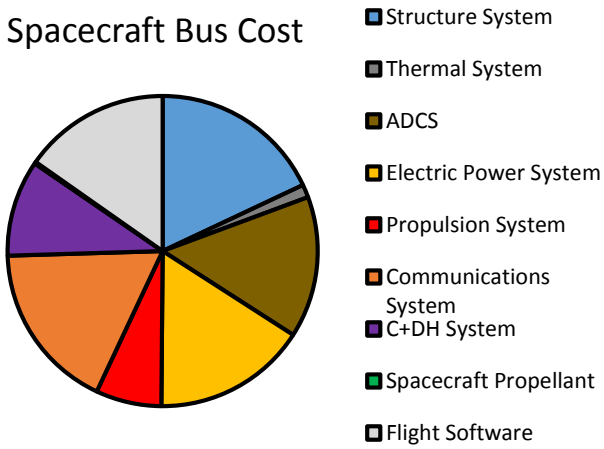


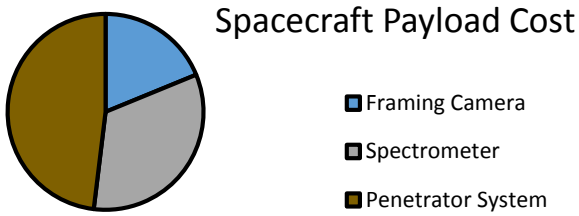

**Table III.54** WBS 4.0 costs allocated to specific functions required at the program level.

| WBS | Description | Cost FY$16 (Millions of US dollars) |
|---|---|---|
| 4.1 | Systems Engineering | $5.723 |
| 4.2 | Program Management | $4.293 |
| 4.3 | Product Assurance | $0.859 |
| 4.4 | Configuration Management | $1.145 |
| 4.5 | Data Management | $0.573 |
| 4.6 | Logistics | $1.717 |
| 4.7 | Safety | $2.004 |
| 4.8 | Site Activation | $0.287 |
| **4.0** | **Total Program Level** | **$16.601** |

**Table III.55** WBS 7.0 costs allocated to specific functions required for mission operations.

| WBS | Description | Cost FY$16 (Millions of US Dollars) |
|---|---|---|
| 7.1 | PMSE / yr. | $0.720 |
| 7.2 | Spacecraft Software Maint. / yr. | $0.198 |
| 7.3 | Mission Operations / yr. | $1.800 |
| 7.4 | Ground Software Maint. / yr. | $0.150 |
| 7.5 | Ground Hardware Maint / yr. | $0.189 |
| 7.6 | Ground Facilities / yr. | $2.511 |
| 7.7 | DSN Usage | $0.020 |
| **7.0** | **Total Mission Operations** | **$4.196** |

In order to ensure that the total mission cost would fall under the $100 million US dollar cost requirement stated in the RFP (Req. 4), requirements were derived to limit how costs should be spent throughout TRIDENT mission design and operations. Table III.62 below lists the derived requirements and how each requirement is met by the cost estimates detailed in this section.

**Table III.56.** TRIDENT cost requirements established to meet primary cost requirement of $100 M US dollars.

| Req. # | Req. Text | Compliance |
|---|---|---|
| 4.0 | The mission cost shall not exceed $100,000,000 US FY$16. | Total cost = $99.953M (Table III.62) |
| 4.8 | The mission cost budget shall include a minimum cost reserve of 15% of total mission costs. | Total reserves = 20% |

### III.P Conclusion

The above sections have described in detail the spacecraft and mission characteristics that define the TRIDENT mission concept. The TRIDENT mission meets the four requirements identified by the RFP: design a “smallsat” configuration, conduct a science mission relating to asteroids, downlink collected data

to ground stations, and complete the entire mission for under $100 million US dollars. Along with the primary goal of risk reduction that was identified from the RFP, the science mission of determining the mechanical and morphological properties of the near-Earth asteroid 2008 EV5 was derived. These properties will be determined by collecting data via the onboard science payload on the rigidity, cohesiveness, and thermal characteristics of the surface as well as obtaining color photos of the asteroid.

The TRIDENT mission includes a custom spacecraft that will successfully transport the unique science payload to the target asteroid with a high probability of success and within budgetary constraints. The data collected by this mission will be particularly relevant in that it will provide insights into what a spacecraft or human can expect when making contact with the surface of an asteroid at relatively low speeds, such as when landing or walking on the surface. This information will be particularly helpful for the upcoming NASA ARM mission set to launch in December, 2021, approximately 2 years after completion of the TRIDENT mission. The timing of the two missions will allow for TRIDENT collected data to be used for risk reduction by the ARM team, validating the purpose of the Low-Cost Asteroid Precursor mission concept.

## IV References


[1] M. Andraschko and W. Tomek, "Low-Cost Asteroid Percursor Mission," AIAA, 2015/16.

[2] D. Mazanek and P. Abell, "Asteroid Redirect Mission Formulation Assessment and Support Team," NASA, 2015.

[3] M. Delbo, G. Libourel, J. Wilkerson, N. Murdoch, P. Michel, K. Ramesh, C. Ganino, C. Verati and S. Marchi, "Thermal fatigue as the origin of regolith on small asteroids," *Nature,* vol. 508, no. 7495, pp. 233-236, 28 June 2013.

[4] M. W. Busch, S. R. Kulkarni, W. Brisken, S. J. Ostro, L. Benner, J. Giorgini and M. Nolan, "Determining asteroid spin states using radar speckles," *Icarus,* vol. 209, pp. 535-541, 2010.

[5] A. Richards, Thermal Imaging: How Far Can You See With It?, FLIR-Direct.

[6] M. S. S. Systems, ECAM-C30 Color CMOS Camera, 3 Megapixel, San Diego, 2013.

[7] P. S. D. Survey, "Vision and Voyages for Planetary Science in the Decade 2013-2022".

[8] C. o. h. Spaceflight, A. a. S. E. Board, S. S. Board, D. o. E. a. P. Sciences, C. o. N. Statistics, d. o. B. a. S. S. a. Education and N. R. Cou, "Pathways to Exploration: Rationales and Approaches for aU.S. Program of Human Space Exploration," The National Academic Press, 2014.

[9] S. S. B. The Role of Small Satellites in NASA and NOAA Earth Observation Programs, National Research Council, May 2006.

[10] O. ATK, "Minotaur I User's Guide," 2015.

[11] SpaceX, Capabilities and Services, Hawthorne, CA, 2016.

[12] Orbital Sciences, "Space Launch Report: Minotaur Data Sheet," 2014.

[13] J. E. Prussing and B. A. Conway, Orbital Mechanics, 2nd ed., Champaign, IL: Oxford University Press, 2012.

[14] P. J. Llanos, J. K. Miller and G. R. Hintz, "Orbital Evolution and Environmental Analysis Around Asteroid 2008 EV5," 2014.

[15] FAA, Rockets and Launch Vehicles, 2011.

[16] J. R. Wertz, D. F. Everett and J. J. Puschell, Space Mission Engineering, Hawthorne, CA: Microcosm Press, 2011.

[17] Aerojet, "Bipropellant Data Sheets," Redmond, 2006.

[18] Northrop Grumman, "Bipropellant Engines and Thrusters," 2016.

[19] E. Beshore, B. Sutter, R. Mink, D. Lauretta, M. Moreau, W. Boynton, J. Dworkin, D. Everett, C. Shinohara and J. Gal-Edd, "The OSIRIS-REx Asteroid," NASA, Greenbelt, 2014.

[20] Rockwell Collins, "Rockwell Collins," [Online]. Available: https://www.rockwellcollins.com/Data/Products/Space_Components/Satellite_Stabilization_Wheels/RSI_01_Momentum_and_Reaction_Wheel.aspx. [Accessed 16 04 2016].

[21] Surrey Space, "sst.us," [Online]. Available: http://www.sst-us.com/getfile/0f0df2ba-76ed-4a46-b863-d4b7aa9887fe. [Accessed 15 April 2016].

[22] MSCI, "MSCI," [Online]. Available: http://www.mscinc.ca/products/MicroWheel-200.pdf. [Accessed 15 April 2016].

[23] Aerojet Rocketdyne, "Rocket.com," Aerojet Rocketdyne, [Online]. Available: https://www.rocket.com/files/aerojet/documents/Capabilities/PDFs/Monopropellant%20Data%20Sheets.pdf. [Accessed 15 April 2016].

[24] Moog, "moog.com," [Online]. Available: http://www.moog.com/literature/Space_Defense/Spacecraft/Propulsion/Monopropellant_Thrusters_Rev_0613.pdf. [Accessed 15 April 2016].

[25] Northrop Grumman, [Online]. Available: http://www.northropgrumman.com/Capabilities/PropulsionProductsandServices/Documents/MRE-01_MonoProp_Thruster.pdf. [Accessed 15 April 2016].

[26] AIRBUS, "space-propulsion.com," AIRBUS, [Online]. Available: http://www.space-propulsion.com/spacecraft-propulsion/hydrazine-thrusters/1n-thruster.html. [Accessed 15 April 2016].

[27] Sinclair Aerospace, Sinclair Aerospace, [Online]. Available: https://www.google.com/a/UniversalLogin?service=jotspot&passive=1209600&continue=https://78462f86-a-744dbb28-s-sites.googlegroups.com/a/sinclairinterplanetary.com/www/startrackers/star%2520tracker%25202015a.pdf?attachauth%3DANoY7coMXaGNQsyHcgEPuYrz86iglgD. [Accessed 15 April 2016].

[28] Blue Canyon Tech., BCT, [Online]. Available: http://bluecanyontech.com/wp-content/uploads/2015/12/Ext-Baffle-NST-Data-Sheet_1.1.pdf. [Accessed 15 April 2016].

[29] Space Micro, "spacemicro.com," [Online]. Available: http://www.spacemicro.com/assets/datasheets/guidance-and-nav/Star-Tracker.pdf. [Accessed 15 April 2016].

[30] Northrop Grumman, "northropgrumman.com," [Online]. Available: http://www.northropgrumman.com/Capabilities/LN200FOG/Documents/ln200s.pdf. [Accessed 16 April 2016].

[31] AIRBUS, "space-airbus.com," [Online]. Available: http://www.space-airbusds.com/media/document/gnc_5_astrix-1000_2015-v_std_b-def.pdf. [Accessed 15 April 2016].

[32] Micro Aerospace Solution, [Online]. Available: http://www.micro-a.net/imu-tmpl.html. [Accessed 15 April 2016].

[33] Spectrolabs, "Next Triple Junction Solar Cells," 2012.

[34] M. Rayman, T. Fraschetti, C. Raymond and C. Russell, "Dawn: A misison in development for exploration of main belt asteroids Vesta and Ceres," *Acta Astronautica*, vol. 58, pp. 605-616, 2006.

[35] C. Clark, EPS, Battery and Solar Panels for Cubesats, Glasgow, Scotland: ClydeSpace Ltd., 2008.

[36] M. S. Gatti, "The Deep Space Network Large Array," JPL, Long Beach, 2003.

[37] A. Kwok and T. Pham, DSN Telecommunications Link Design Handbook, California Institute of Technology, 2010.

[38] A. G. Santo, S. C. Lee and R. E. Gold, Near Spacecraft and Instrumentation, Laurel, Maryland: The Johns Hopkins University Applied Physics Laboratory, 1996.

[39] T. Mai, "Deep Space Network (DSN)," NASA, 2014.

[40] General Dynamics Advanced Information Systems, "X-Band Solid State Power Amplifier," 2015. [Online]. Available: https://gdmissionsystems.com/wp-content/uploads/2015/07/17b-SSPA_Datasheet.pdf.

[41] C. Aklinli, M. Gamache, M. Rose, A. Rost, J. Sales and J. Tang, "Telemetry, Tracking, Communications, Command and Data Handling," Virginia Tech, Blacksburg, 2004.

[42] J. R. Marshall, D. Stanley and J. E. Robertson, "Matching Processor Performance to Mission Application Needs," March 2011.

[43] Burcin, "RAD750," 2002.

[44] SEAKR Engineering, Inc., SEAKR History, Centennial, Colorado: SEAKR Engineering, 2011.

[45] V. Reddy, L. L. Corre, M. Hicks, K. Lawrence, B. J. Buratti, P. A. Abell, M. J. Gaffey and P. S. Hardersen, "Composition of near-Earth Asteroid 2008 EV5," *Icarus*, vol. 221, no. 2, pp. 678-681, December 2012.

[46] V. Ali-Lagoa, L. Lionni, M. Delbo, B. Gundlach, J. Blum and J. Licandro, "Thermophysical properties of near-Earth asteroid," *Astronomy and Astrophysics*, 25 October 2013.

[47] A. W. Harris and J. S. Lagerros, Asteroids in the Thermal Infrared, Alabama: The University of Arizona Press, 2002, pp. 205-219.

[48] D. Gilmore, Spacecraft Thermal Control Handbook, American Institute of Aeronautics and Astronautics/Aerospace Press, 2002.

[49] M. Finckenor and D. Dooling, "Multilyaer Insulation Material Guidelines," NASA, MSFC, Alabama, April 1999.

[50] ASM International, Metals Handbook Vol. 2 - Properties and Selection: Nonferrous Alloys and Special-Purpose Materials, 1990.

[51] D. Fraser, H. Kleespies, C. Vasicek and C. Annarella, Spacecraft Structures, 1991.

[52] R. Reddy, Effect of Low Earth Orbit Atomic Oxygen on Spacecraft Materials, Bangalore, India: Journal of Materials Science, 1995.

[53] SpaceFlorida, Cape Canaveral Spaceport Master Plan, 2013.

[54] D. C. Freeman, "ARES: An Aerial Regional-scale Environmental Survey of Mars," NASA Langley Research Center, 2002.

[55] S. D'Urso, "Systems Engineering Life Cycle Models," University of Illinois at Urbana-Champaign, 2016.

[56] A. Bacskay, "Proposing a Mission," NASA, Huntsville, 2014.

[57] K. McCoy and K. Kipp, Implications of the AO Reserve Policy, NASA Cost Symposium, 2013.

[58] A. Backsay, "Discovery Program Proposing a Mission," Marshall Space Flight Center, [Online]. Available: http://discovery.nasa.gov/p_mission.cfml.

[59] K. L. Painter, "ULA releases rocket costs in SpaceX counterstrike," The Denver Post, Denver, 2014.

[60] JPL, "341843 (2008 EV5)," October 2012. [Online]. Available: http://ssd.jpl.nasa.gov/sbdb.cgi?sstr=2008%20EV5;orb=1.

[61] A. Siahpush and J. Gleave, "A Brief Survey of Attitude Control Systems for Small Satellites Using Momentum Concepts," AIAA, 1990.

[62] W. F. Bottke, D. Vokrouhlicky, D. Rubincam and D. Nesvorny, "The Yarkovsky and YORP Effects: Implications for Asteroid Dynamics," *Annual Review of Earth and Planetary Science,* vol. 34, pp. 157-191, 2006.

[63] D. Szondy, "NASA Outlines Asteroid Redirect Mission," Gizmag, 2015.

[64] E. Grayzeck, "Dynamic Penetrometer Experiment," *NASA Space Science Data Coordinated Archive,* 1981.

[65] Institute of Planetary Research, "Multi purpose Sensors for Surface and Subsurface Science," *DLR,* 2014.

[66] "Instrumentation," *OSIRIS-REx,* 2015.

[67] P. R. Christensen, "Thermal Emission Spectrometer," *NASA Space Science Data Coordinated Archive,* 1996.

[68] H. Grooms, C. DeBarro and S. Paydarfar, "What is an Optimal Spacecraft Structure?," *Journal of Spacecraft and Rockets,* vol. 29, no. 4, 1992.

[69] H. U. Keller, "Framing Camera," NASA Space Science Data Coordinated Archive, 2007.

[70] Anderson and Heister, "Liquid Rocket Propulsion Systems," 2011.

[71] L. C. Elonen-Wright, "Glenn Research Facilities," 30 November 2011. [Online]. Available: https://facilities.grc.nasa.gov/using.html.

[72] S. P. Laboratory, "Electric Propulsion," MIT, Cambridge, 2015.

[73] J. S. Levine, "Science from a Mars Airplane: The Aerial Regional-Scale Environmental Survey (ARES) of Mars," *Unmanned Unlimited Systems,* 15-18 September 2003.

[74] D. Wiper, "Fine Sun Sensor," Moog, Bradford, 2013.

[75] Applied Technology Associates, "Optical Inertial Reference Units," ATA, Albuquerque, 2009.

[76] S. Adler, A. Warshavsky and A. Peretz, "Low-Cost Cold-Gas Reaction Control System for Sloshsat FLEVO Small Satellite," *Journal of Spacecraft and Rockets,* vol. 42, no. 2, 2005.

[77] S. Clark, "Student-built satellites, military payloads put in orbit," Spaceflight Now, 2013.

[78] J. Reinecke and J. Kruder, "Advanced Materials and Structures," in *AIAA/ICAS International Air and Space Symposium and Exposition,* Dayton, 2003.

[79] R. Beisel, J. Black and K. Poole, "Work Breakdown Structure Handbook," NASA, Washington D.C., 2010.

[80] N. Augustine, Review of U.S. Human Spaceflight Plans Committee, Washington DC, 2009.

[81] MOMENTUM WHEEL, 2004.

**Table. Compliance Matrix**

| Section # | Req. Text | Page # |
|---|---|---|
| 1 | Requirement Definition: | |
| | Mission Requirements and Design Requirements | 35-93 |
| 2 | Trade Studies: | |
| | Precursor Mission Architecture | 12 -1 5 |
| | Target Asteroid Selection | 3 |
| | Mission Operations | 20 - 22 |
| 3 | Design Integration and Operation: | |
| | Structure/ Mechanisms | 66 - 67 |
| | Thermal | 63 - 66 |
| | Attitude Control | 44 - 48 |
| | Telemetry/Communication | 57 - 61 |
| | Tracking and Command | 61 - 63 |
| | Electric Power | 50 - 57 |
| | Propulsion | 40 - 44 |
| | Optical Payload and Sensors | 16 - 20 |
| | Interface with Launch Vehicle | 78 - 80 |
| | Mission Concept of Operations | 30 - 32 |
| 4 | Cost Estimate | 88-93 |
| | Work Break Down Structure | 88 |
| 5 | Summary | 1 - 9 |
| | References | 94 - 96 |
| 6 | Design Requirements and Constraints: | |
| | Small Sat Concept | 12 |
| | Basic Science Mission | 12 -16 |
| 7 | Trade Studies at Architectural Level: | |
| | Vehicle Architecture (Structures/Configuration) | 68 |
| | Launch Vehicle | 35 |
| | Science Instruments | 16 - 20 |
| | Selection of Target Asteroid | 3 |
| | Orbital Mechanics | 36-37 |
| | Spacecraft and Other Mission Systems (ADCS) | 45 -48 |
| 8 | Science ( Planned Science Approach, Planned Observations, Science Instruments, Collection Perid, Sampling and Target) | 12 - 27 |
| 9 | Communications and Ground Systems Architecture | 57 - 61 |
| 10 | Mission Operations (Launch, Orbit Transfer, Arrival/Landing/Docking, Station Keeping, Re-pointing and Other Maneuvers) | 30 - 33 |
| | Ground Segment for Operations | 78 - 79 |
| 11 | Mission Concept: | |
| | Inertial Hovering | 37 - 38 |
| 12 | Mission Solution (Safety, Reliability, Affordability, Operability) | 80 - 92 |
| 13 | Cost (Should not exceed $100M) | 91 |

**V Acronyms**

ADCS Attitude Determination and Control System
ARM Asteroid Redirect Mission
ATK Orbital ATK
ATLO Assembly, Test, and Launch Operations
BWG Beam Waveguide
C+DH Command and Data Handling
CAD Computer Aided Design
CERR Critical Events Readiness Review
CDR Critical Design Review
CMG Control Moment Gyroscope
Con-ops Concept of Operations
COPV Composite Overwrapped Pressure Vessel
COTS Commercial Off-The-Shelf
ΔV Delta V – Change in velocity
DR Decommissioning Review
DSN Deep Space Network
DVR Digital Video Recorder
EPS Electric Power System
FAST Formulation Assessment and Support Team
FRR Flight Readiness Review
HEF High Efficiency
HRC High Resolution Camera
IA+T Integration, Assembly, and Test
IMU Inertial Measurement Unit
$I_{sp}$ Specific Impulse
KSC NASA's Kennedy Space Center
LEO Low-Earth Orbit
LV Launch Vehicle
MCR Mission Concept Review
MDR Mission Definition Review
MLI Multi-Layer Insulation
MMH Monomethylhydrazine
MMOD Micrometeoroid and Orbital Debris
MPF Minotaur Processing Facility
MSSS Malin Space Science Systems
N2 Nitrogen gas
NEA Near Earth Asteroid
NICM NASA's Instrument Cost Model
NTO Dinitrogen tetroxide
ORR Operational Readiness Review
PDR Preliminary Design Review
PI Principal Investigator
PLAR Post-Launch Assessment Review
PM Project Manager
PMSE Program Management and Systems Engineering
PPF Payload Processing Facility
P-POD Poly Pico-Satellite Orbital Deployer
Req. Requirement
RF Radio Frequency
RFP Request for Proposal
SEP Solar Electric Propulsion
SIR System Integration Review
SRR System Requirements Review
SSCM Small Spacecraft Cost Model
SSDR Solid-State Data Recorder
TIS Thermal Infrared Spectrometer
TRIDENT Triple Reconnaissance Impactors for Development and Evaluation of Near-Earth asteroid Technologies
TRL Technology Readiness Level
UIUC University of Illinois at Urbana-Champaign
UV Ultraviolet
WBS Work Breakdown Structure
XTJ NeXt Triple Junction